Pioneer sound.vision.soul

Service Manual

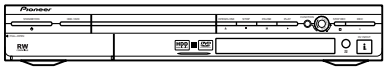

DVR-510H-S

ORDER NO.
RRV2855

DVD RECORDER

DVR-510H-S

THIS MANUAL IS APPLICABLE TO THE FOLLOWING MODEL(S) AND TYPE(S).

Model	Type	Power Requirement	Regional restriction codes (Region No.)	Remarks
DVR-510H-S	KUXU/CA	AC120V	1	

- **When servicing this model, some service procedures may reset the settings that customer set (*) to the factory default settings. Make sure to explain this to the customer.**

(*) : Initial Setup (Clock Setting, Remote Control Set, Channel settings, Video Out settings, Audio In settings, Audio Out settings, Language settings)

Refer to the chapter 13 of the Operating Instructions for more details.

An HDD (Hard Disc Drive) is mounted in this product.
The HDD is a precision instrument very vulnerable to shock and electrostatic charges.
Please read "7.4 Cautions on Handling the HDD" in this manual and exercise sufficient caution when handling the HDD itself, as well as the product with the HDD built in.
When an HDD becomes defective and inoperable, restoration of the user's data recorded on the HDD, or copying of the user's recorded data to other media (such as a new HDD) is totally impossible. Before servicing, OBTAIN THE USER'S PRIOR CONSENT to that effect.
The user must be made aware that all recorded data are deleted if the HDD is intialized.

For details, refer to "Important symbols for good services" .

PIONEER CORPORATION 4-1, Meguro 1-chome, Meguro-ku, Tokyo 153-8654, Japan
PIONEER ELECTRONICS (USA) INC. P.O. Box 1760, Long Beach, CA 90801-1760, U.S.A.
PIONEER EUROPE NV Haven 1087, Keetberglaan 1, 9120 Melsele, Belgium
PIONEER ELECTRONICS ASIACENTRE PTE. LTD. 253 Alexandra Road, #04-01, Singapore 159936
ⓒ**PIONEER CORPORATION 2003**

T-ZZV OCT. 2003 printed in Japan

SAFETY INFORMATION

This service manual is intended for qualified service technicians; it is not meant for the casual do-it-yourselfer. Qualified technicians have the necessary test equipment and tools, and have been trained to properly and safely repair complex products such as those covered by this manual.
Improperly performed repairs can adversely affect the safety and reliability of the product and may void the warranty. If you are not qualified to perform the repair of this product properly and safely, you should not risk trying to do so and refer the repair to a qualified service technician.

WARNING

This product contains lead in solder and certain electrical parts contain chemicals which are known to the state of California to cause cancer, birth defects or other reproductive harm.

Health & Safety Code Section 25249.6 – Proposition 65

NOTICE

(FOR CANADIAN MODEL ONLY)

Fuse symbols (fast operating fuse) and/or (slow operating fuse) on PCB indicate that replacement parts must be of identical designation.

REMARQUE

(POUR MODÈLE CANADIEN SEULEMENT)

Les symboles de fusible (fusible de type rapide) et/ou (fusible de type lent) sur CCI indiquent que les pièces de remplacement doivent avoir la même désignation.

(FOR USA MODEL ONLY)

1. SAFETY PRECAUTIONS

The following check should be performed for the continued protection of the customer and service technician.

LEAKAGE CURRENT CHECK

Measure leakage current to a known earth ground (water pipe, conduit, etc.) by connecting a leakage current tester such as Simpson Model 229-2 or equivalent between the earth ground and all exposed metal parts of the appliance (input/output terminals, screwheads, metal overlays, control shaft, etc.). Plug the AC line cord of the appliance directly into a 120V AC 60 Hz outlet and turn the AC power switch on. Any current measured must not exceed 0.5 mA.

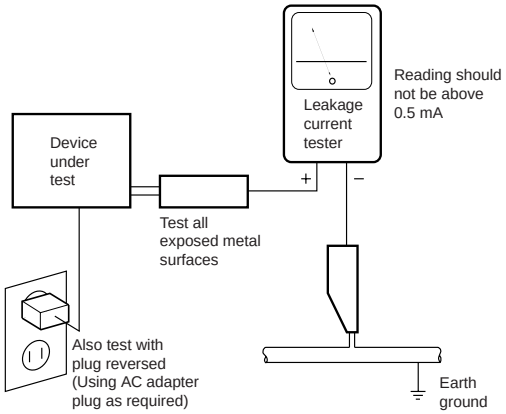

AC Leakage Test

ANY MEASUREMENTS NOT WITHIN THE LIMITS OUTLINED ABOVE ARE INDICATIVE OF A POTENTIAL SHOCK HAZARD AND MUST BE CORRECTED BEFORE RETURNING THE APPLIANCE TO THE CUSTOMER.

2. PRODUCT SAFETY NOTICE

Many electrical and mechanical parts in the appliance have special safety related characteristics. These are often not evident from visual inspection nor the protection afforded by them necessarily can be obtained by using replacement components rated for voltage, wattage, etc. Replacement parts which have these special safety characteristics are identified in this Service Manual.

Electrical components having such features are identified by marking with a ⚠ on the schematics and on the parts list in this Service Manual.

The use of a substitute replacement component which does not have the same safety characteristics as the PIONEER recommended replacement one, shown in the parts list in this Service Manual, may create shock, fire, or other hazards.

Product Safety is continuously under review and new instructions are issued from time to time. For the latest information, always consult the current PIONEER Service Manual. A subscription to, or additional copies of, PIONEER Service Manual may be obtained at a nominal charge from PIONEER.

IMPORTANT

THIS PIONEER APPARATUS CONTAINS LASER OF CLASS 1.
SERVICING OPERATION OF THE APPARATUS SHOULD BE DONE BY A SPECIALLY INSTRUCTED PERSON.

LASER DIODE CHARACTERISTICS

MAXIMUM OUTPUT POWER : 50 mw
WAVELENGTH : 658 nm

WARNING!

DEVICE INCLUDES LASER DIODE WHICH EMITS INVISIBLE INFRARED RADIATION WHICH IS DANGEROUS TO EYES. THERE IS A WARNING SIGN ACCORDING TO PICTURE 1 INSIDE THE DEVICE CLOSE TO THE LASER DIODE.

LASER
Picture 1
Warning sign for laser radiation

■ LABEL CHECK

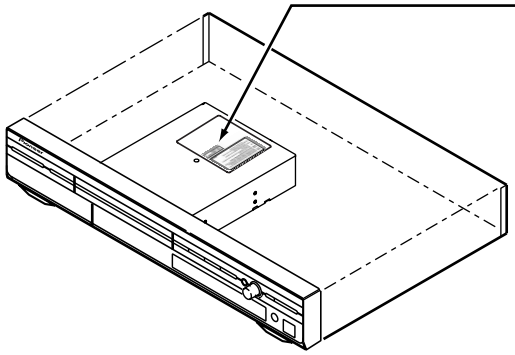

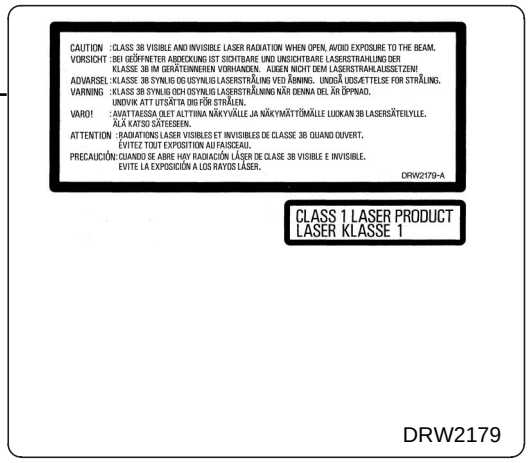

* Some models have different caution labels like the figure below .

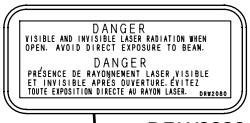

DRW2080

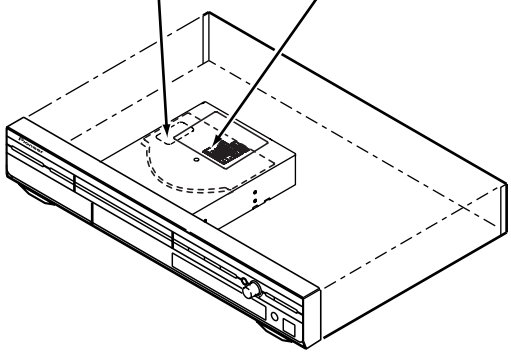

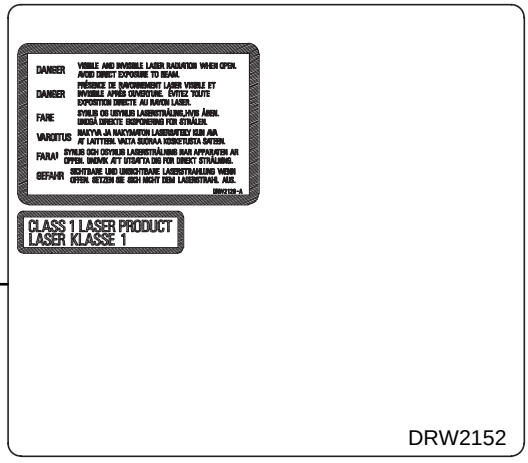

Additional Laser Caution

1. The ON/OFF(ON:low level,OFF:high level) status of the CLAMP signals for detecting the loading state are detected by the drive CPUs, and the design prevents laser diode oscillation when the CLAMP signal turns OFF.
   In normal operation, if no disc is clamped, the laser diode oscillation is disabled.
   However, the interlock does not always operate in the test mode.

2. When the cover is opened, close viewing of the objective lens with the naked eye will cause exposure to a Class 3A laser beam.

[Important symbols for good services]

In this manual, the symbols shown-below indicate that adjustments, settings or cleaning should be made securely.
When you find the procedures bearing any of the symbols, be sure to fulfill them:

1. Product safety

You should conform to the regulations governing the product (safety, radio and noise, and other regulations), and should keep the safety during servicing by following the safety instructions described in this manual.

2. Adjustments

To keep the original performances of the product, optimum adjustments or specification confirmation is indispensable. In accordance with the procedures or instructions described in this manual, adjustments should be performed.

3. Cleaning

For optical pickups, tape-deck heads, lenses and mirrors used in projection monitors, and other parts requiring cleaning, proper cleaning should be performed to restore their performances.

4. Shipping mode and shipping screws

To protect the product from damages or failures that may be caused during transit, the shipping mode should be set or the shipping screws should be installed before shipping out in accordance with this manual, if necessary.

5. Lubricants, glues, and replacement parts

Appropriately applying grease or glue can maintain the product performances. But improper lubrication or applying glue may lead to failures or troubles in the product. By following the instructions in this manual, be sure to apply the prescribed grease or glue to proper portions by the appropriate amount.For replacement parts or tools, the prescribed ones should be used.

CONTENTS

SAFETY INFORMATION....2
1. SPECIFICATIONS....6
2. EXPLODED VIEWS AND PARTS LIST....8
2.1 PACKING....8
2.2 EXTERIOR....10
2.3 FRONT PANEL....12
3. BLOCK DIAGRAM AND SCHEMATIC DIAGRAM....14
3.1.1 OVERALL BLOCK DIAGRAM....14
3.1.2 TUMJ ASSY BLOCK DIAGRAM....16
3.1.3 MAIN ASSY BLOCK DIAGRAM....18
3.1.4 POWER BLOCK DIAGRAM....20
3.2 ATAB ASSY and OVERALL WIRING DIAGRAM....22
3.3 TUMJ(1/2), FRJB and DVJB ASSYS....24
3.4 TUMJ ASSY(2/2)....26
3.5 MAIN ASSY(1/5)....28
3.6 MAIN ASSY(2/5)....30
3.7 MAIN ASSY(3/5)....32
3.8 MAIN ASSY(4/5)....34
3.9 MAIN ASSY(5/5)....36
3.10 MHLP ASSY....38
3.11 FLKY and LEDB ASSYS....40
3.12 POWER SUPPLY UNIT....42
3.13 WAVE FORMS....43
4. PCB CONNECTION DIAGRAM....45
4.1 ATAB ASSY....45
4.2 TUMJ, FRJB and DVJB ASSYS....46
4.3 MAIN and MHLP ASYS....50
4.4 POWER SUPPLY UNIT....54
4.5 FLKY and LEDB ASSYS....56
5. PCB PARTS LIST....57
6. ADJUSTMENT....61
6.1 TUMJ ASSY ADJUSTMENT....61
6.2 MAIN ASSY ADJUSTMENT....62
7. GENERAL INFORMATION....63
7.1 DIAGNOSIS....63
7.1.1 CPRM ID NUMBER AND DATA SETTING....63
7.1.2 SERVICE MODE....67
7.1.3 DV DEBUG MODE....77
7.1.4 ERROR RATE MEASUREMENT....80
7.1.5 VIDEO ADJUSTMENT FOR SPECIFIC AREA....82
7.1.6 SETUP SEQUENCE....86
7.1.7 DISASSEMBLY....87
7.2 IC....90
7.3 OUTLINE OF THE PRODUCT....117
7.4 CAUTIONS ON HANDLING THE HDD....120
7.5 DISC/CONTENT FORMAT....122
7.6 CLEANING....124
8. PANEL FACILITIES....125

1. SPECIFICATIONS

General

System.....HDD, DVD-Video, DVD-R/RW
Video-CD, CD, CD-R/RW (WMA, MP3, JPEG. CD-DA)
Power requirements.....120 V, 60 Hz
Power consumption.....42 W
Power consumption in standby mode.....0.44 W (FL off)
Weight .....11 lb 1 oz / 5.0 kg
Dimensions.....420 (W) x 69 (H) x 341 (D) mm
Operating temperature.....+5°C to +35°C
Operating humidity.....5% to 85% (no condensation)
TV format.....NTSC

Recording

Recording format .....DVD Video Recording
DVD-VIDEO

Recordable discs

DVD-RW (DVD Re-recordable disc)
DVD-R (DVD Recordable disc)

Video recording format

Sampling frequency.....13.5MHz
Compression format.....MPEG

Audio recording format

Sampling frequency 48kHz
Compression format.....Dolby Digital or Linear PCM
(uncompressed)

Recording time

HDD

Fine (FINE).....Approx. 17 hour
Standard Play (SP).....Approx. 34 hours
Long Play (LP).....Approx. 68 hours
Extended Play (EP).....Approx. 102 hours
Manual Mode (MN).....Approx. 17–102 hours

DVD-R/DVD-RW

Fine (FINE).....Approx. 1 hour
Standard Play (SP).....Approx. 2 hours
Long Play (LP).....Approx. 4 hours
Extended Play (EP).....Approx. 6 hours
Manual Mode (MN).....Approx. 1–6 hours

Tuner

Receivable channels

VHF.....2–13ch
UHF.....14–69ch
CATV.....C1–C125ch

Timer

Programs.....1 month/32 programs
Clock.....Quartz lock (12-hour digital display)
Power off memory.....Approx. 5 years (after manufacture)

Input/Output

VHF/UHF antenna input/output terminal.....VHF/UHF set
75 Ω (F-shape connector)
Video input.....Input 1, 3 (rear), 2 (front)
Input level.....1 Vp-p (75 Ω)
Jacks.....RCA jack
Video output.....Output 1,2

Output level.....1 Vp-p (75 Ω)
Jacks.....RCA jack
S-Video input.....Input 1, 3 (rear), 2 (front)
Y (luminance) - Input level.....1 Vp-p (75 Ω)
C (color) - Input level.....286 mVp-p (75 Ω)
Jacks.....4 pin mini DIN
S-Video output.....Output 1,2
Y (luminance) - Output level.....1 Vp-p (75 Ω)
C (color) - Output level.....286 mVp-p (75 Ω)
Jacks.....4 pin mini DIN
Component video output
Output level.....Y: 1.0 Vp-p (75 Ω)
PB, PR: 0.7 Vp-p (75 Ω)
Jacks.....RCA jacks
Audio input.....Input 1, 3 (rear), 2 (front) L/R
Input level
During audio input.....2V rms
(Input impedance: more than 22 kΩ)
Jacks.....RCA jacks
Audio output.....Output 1,2 L/R
During audio output.....2V rms
(Output impedance: less than 1.5 kΩ)
Jacks.....RCA jacks
Control input.....Mini jack
DV input/output.....4 pin
(i.LINK/IEEE 1394 standard)

Supplied accessories

Remote control.....1
Dry cell batteries (AA/R6P).....2
Audio / Video cable (red/white/yellow).....1
RF antenna cable.....1
Power cable.....1
Operating Instructions.....1
Warranty card.....1
HDD Caution.....1

Note: The specifications and design of this product are subject to change without notice, due to improvement.

● Accessories

• Remote control ×1
(VXX2887)

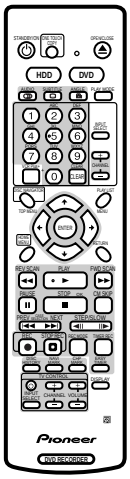

• Dry cell batteries ×2
(AA/R6P)

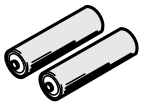

• RF antenna cable ×1
(VDE1025)

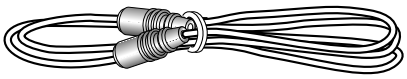

• Power cable ×1
(ADG7021)

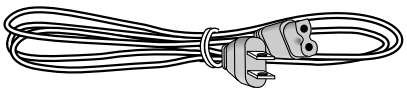

• Audio / Video cable(L=1.5m) ×1
(red/white/yellow)
(VDE1077)

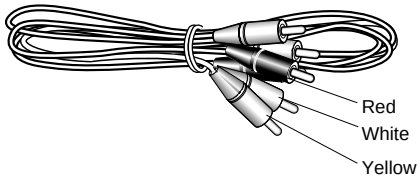

2. EXPLODED VIEWS AND PARTS LIST

NOTES:
- *Parts marked by "NSP" are generally unavailable because they are not in our Master Spare Parts List.*
- *The ⚠ mark found on some component parts indicates the importance of the safety factor of the part. Therefore, when replacing, be sure to use parts of identical designation.*
- *Screws adjacent to ▼ mark on product are used for disassembly.*
- *For the applying amount of lubricants or glue, follow the instructions in this manual. (In the case of no amount instructions, apply as you think it appropriate.)*

2.1 PACKING

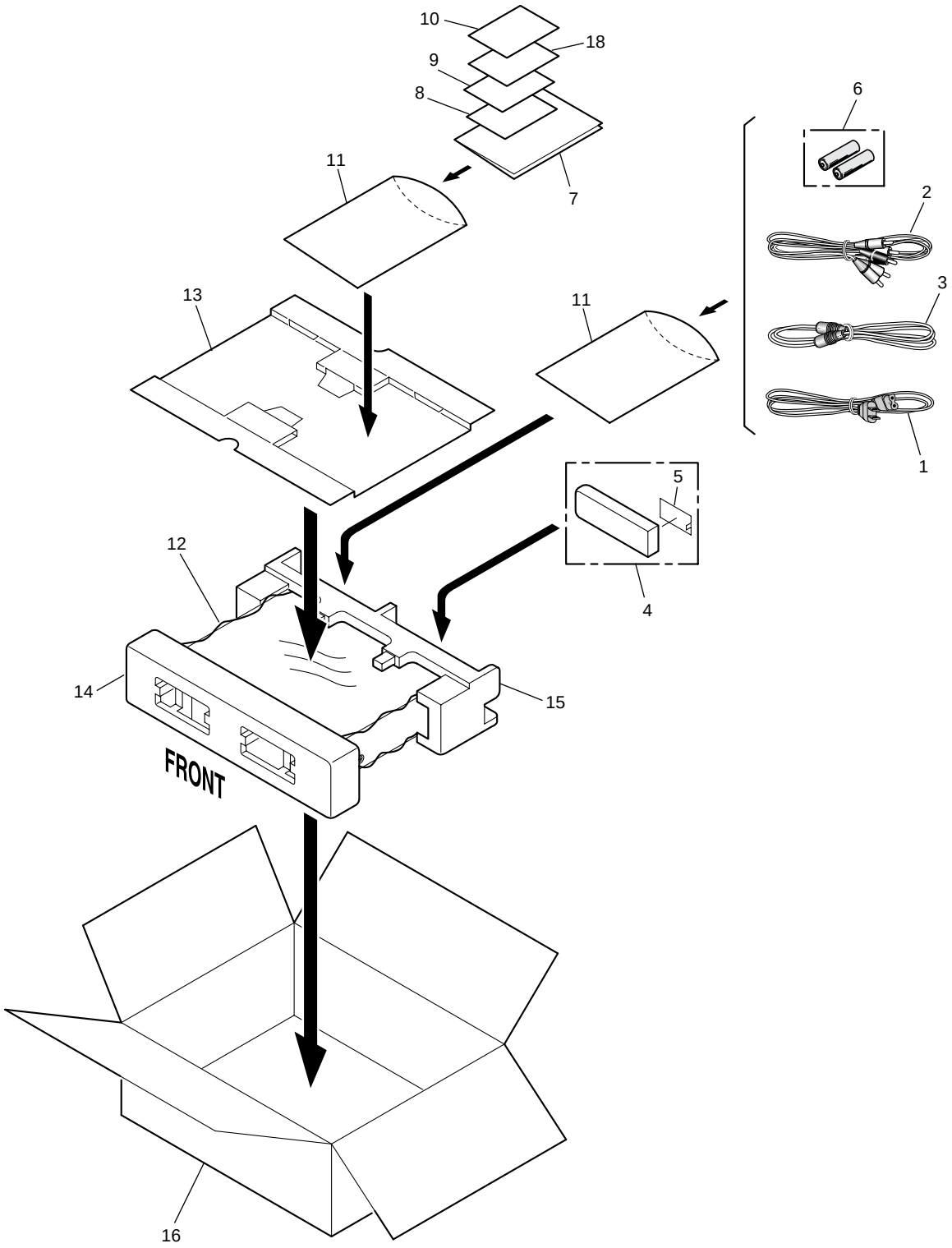

PACKING parts List

Mark	No.	Description	Part No.
⚠	1	Power Cable	ADG7021
	2	Audio/Video Cable	VDE1077
	3	RF Antenna Cable	VDE1025
	4	Remote Control	VXX2887
	5	Battery Cover	AZN7933
NSP	6	Dry Cell Batteries (R6P,AA)	VEM1030
	7	Operating Instructions (English)	VRB1315
NSP	8	Information Card	VRR1048
NSP	9	Card	VRY1132
NSP	10	Warranty Card	ARY7045
	11	Polyethylene Bag	VHL1051
	12	Mirror Sheet	VHL1006
	13	Accessory Case	VHC1112
	14	Front Pad	VHA1346
	15	Rear Pad	VHA1347
	16	Packing Case	VHG2421
	17	• • • • • •	
NSP	18	HDD Caution 8L	VRR1047

2.2 EXTERIOR

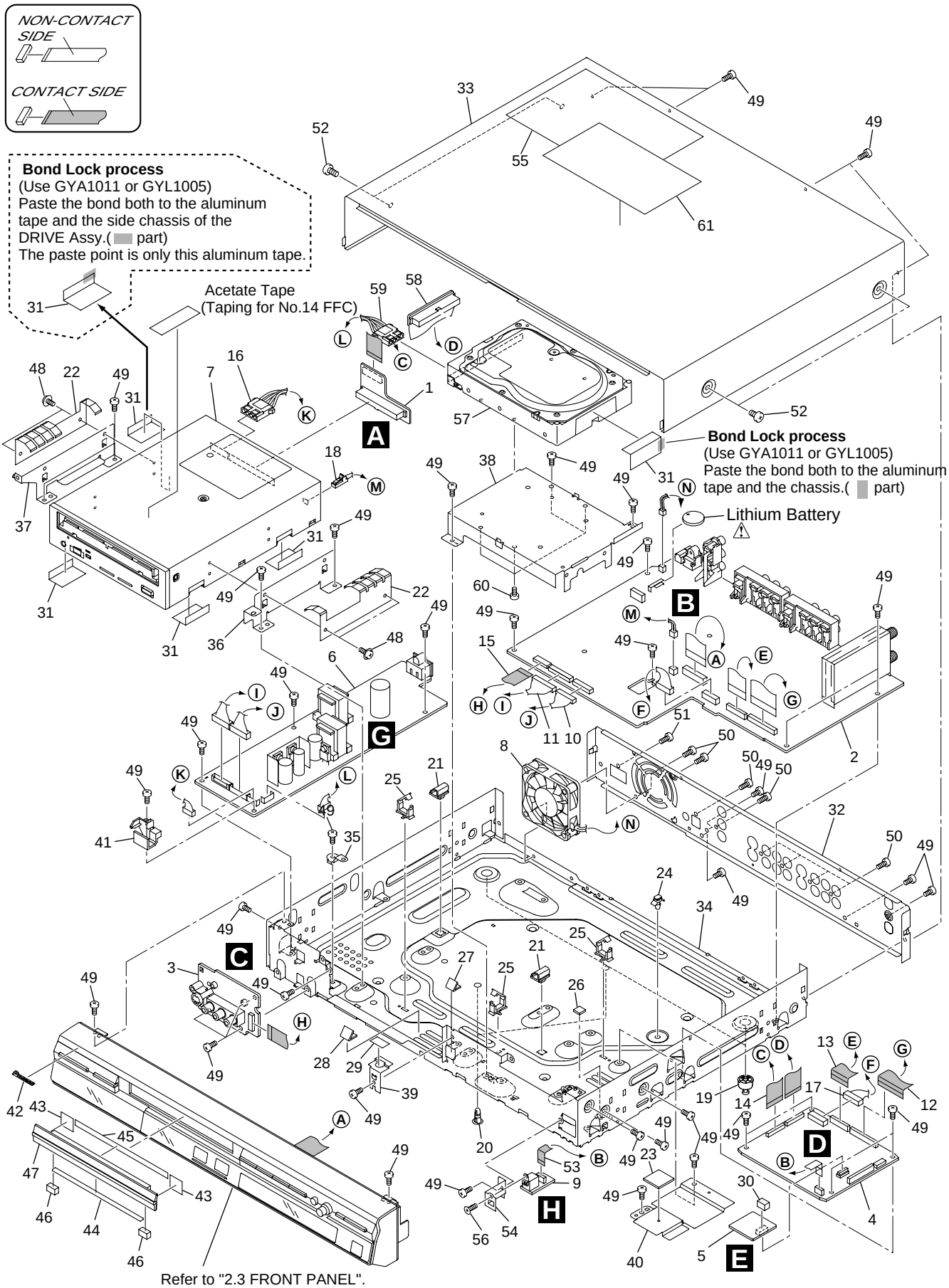
NON-CONTACT SIDE
CONTACT SIDE
Bond Lock process
(Use GYA1011 or GYL1005)
Paste the bond both to the aluminum tape and the side chassis of the DRIVE Assy.(part)
The paste point is only this aluminum tape.
Acetate Tape
(Taping for No.14 FFC)
Bond Lock process
(Use GYA1011 or GYL1005)
Paste the bond both to the aluminum tape and the chassis.(part)
Lithium Battery
Refer to "2.3 FRONT PANEL".

EXTERIOR parts List

Mark	No.	Description	Part No.
	1	ATAB ASSY	VWV1968
	2	TUMJ ASSY	VWV1960
	3	FRJB ASSY	VWV1964
	4	MAIN ASSY	VWV1955
	5	MHLP ASSY	VWV1991
⚠	6	POWER SUPPLY UNIT	VWR1373
	7	DRIVE ASSY R6	VXX2898
	8	DC FAN Motor	VXM1109
	9	DVJB ASSY	VWV1966
	10	Connector Assy	PF08EE-D20
	11	Connector Assy	PF13PP-D20
	12	Flexible Cable (32P)	VDA1975
	13	Flexible Cable (21P)	VDA1976
	14	Flexible Cable (40P)	VDA1977
	15	Flexible Cable (15P)	VDA1978
	16	Housing Assy (4P)	VKP2313
	17	Housing Assy (8P)	VKP2314
	18	Housing Assy (2P)	VKP2315
	19	Leg Assy	AEC7113
NSP	20	PCB Holder	PNW1706
NSP	21	P. Plate Holder	PNY-405
	22	Earth Plate	VBK1148
	23	Radiation Sheet	VEB1360
	24	Card Spacer	VEC1708
NSP	25	Clamp	VEC2362
	26	Heatsink Cushion	VEC2363
	27	Gasket A	VEC2382
	28	Gasket B	VEC2393
	29	Gasket Sheet	VEC2394
	30	M Cushion A	VEC2398
	31	Aluminum tape	VEF1056
	32	Rear Panel	VNA2609
	33	Bonnet Case	VXX2897
NSP	34	Base Chassis	VNB1039
	35	PCB Base	VNE2278
NSP	36	Writer Stay R	VNE2318
NSP	37	Writer Stay L	VNE2319
NSP	38	HDD Stay	VNE2320
NSP	39	Bonnet Angle	VNE2321
NSP	40	Heatsink	VNH1070
	41	Cable Holder	VNK5330
	42	Pioneer Name Plate	VAM1136
	43	Tray Sheet A	VEC2346
	44	Tray Sheet B	VEC2358
	45	Tray Sheet C	VEC2395
	46	Tray Sheet D	VEC2396
	47	Tray Panel Assy	VXA2602
	48	Screw	AMZ30P060FMC
	49	Screw	BBZ30P060FMC
	50	Screw	BPZ30P080FZK
	51	Screw	PPZ30P080FMC
	52	Screw	BCZ40P060FNI
	53	Flexible Cable (7P)	VDA1979
NSP	54	DV Angle	VNE2322
	55	Bonnet Label	VRW1985
	56	Screw	VBA1088
	57	HDD 80G 4R080L0 SV	VXF1010
	58	ATA Assy	VWX1232
	59	Housing Assy(4P)	VKP2317
	60	#6-32 Screw	DBA1125
NSP	61	HDD Caution 8L B	VRR1046

2.3 FRONT PANEL

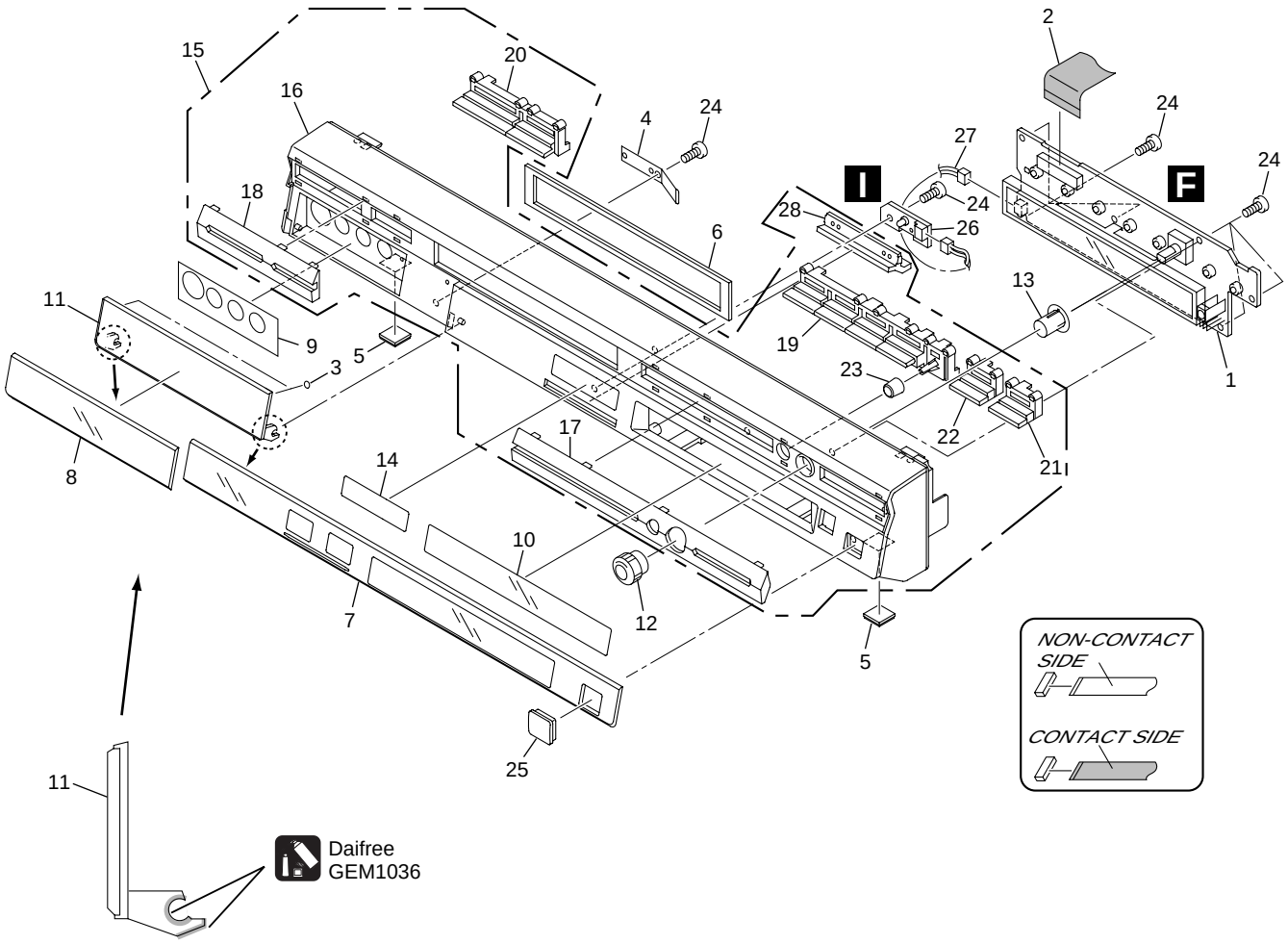

FRONT PANEL parts List

Mark	No.	Description	Part No.
	1	FLKY ASSY	VWG2444
	2	Flexible Cable (19P)	VDA1974
	3	Rubber Sheet	AEB7054
	4	Door Spring	VBK1144
	5	Rubber Foot	VEB1349
	6	Drive Sheet	VEC2345
	7	FL Lens	VEC2353
	8	Door Lens	VEC2375
	9	Jack Sheet	VEC2381
	10	Mirror Filter	VEC2347
	11	Jack Door	VNK5309
	12	JOG Dial L	VNK5324
	13	JOG Base	VNK5317
	14	Hologram Label	VRW1962
	15	Front Panel Assy	VXA2622
NSP	16	Front Panel	VNK5364
	17	Front Cover R	VNK5360
	18	Front Cover L	VNK5359
	19	Main Key S	VNK5312
	20	Power Key S	VNK5313
	21	Rec Key	VNK5314
	22	Stop Key S	VNK5315
	23	Function Cover	VNK5318
	24	Screw	BPZ30P080FZK
	25	DV Cover	VNK5365
	26	LEDB ASSY	VWG2434
	27	Housing Assy(2P)	VKP2318
	28	LED Lens	VNK5325

3. BLOCK DIAGRAM AND SCHEMATIC DIAGRAM

3.1 BLOCK DIAGRAM

3.1.1 OVERALL BLOCK DIAGRAM

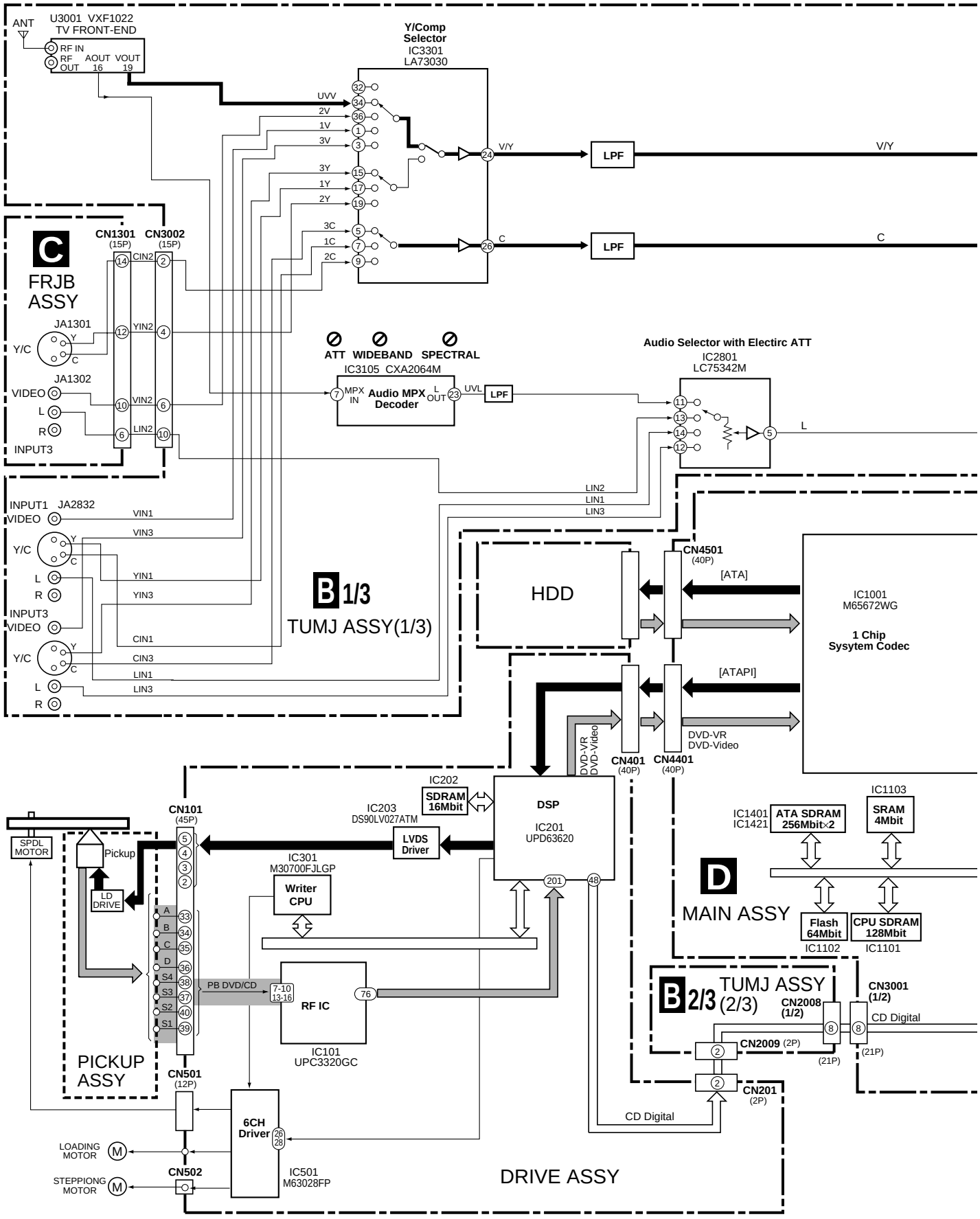

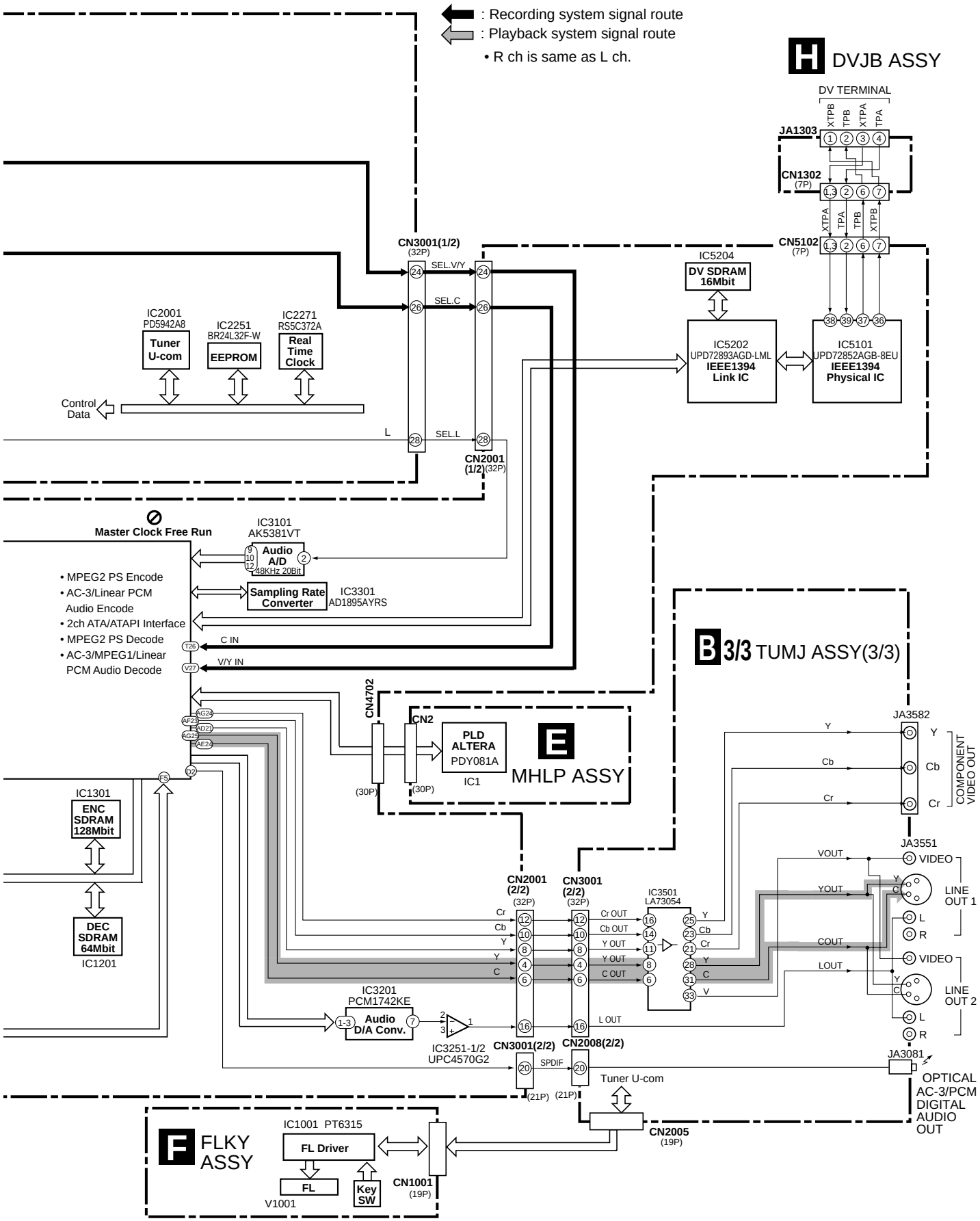
: Recording system signal route
: Playback system signal route
• R ch is same as L ch.
H DVJB ASSY
DV TERMINAL
XTPB TPB XTPA TPA
JA1303
CN1302 (7P)
CN5102 (7P)
CN3001(1/2) (32P)
SEL.V/Y
SEL.C
SEL.L
CN2001 (1/2) (32P)
IC2001 PD5942A8 Tuner U-com
IC2251 BR24L32F-W EEPROM
IC2271 RS5C372A Real Time Clock
Control Data
IC5204 DV SDRAM 16Mbit
IC5202 UPD72893AGD-LML IEEE1394 Link IC
IC5101 UPD72852AGB-8EU IEEE1394 Physical IC
Master Clock Free Run
IC3101 AK5381VT Audio A/D 48KHz 20Bit
IC3301 AD1895AYRS Sampling Rate Converter
• MPEG2 PS Encode
• AC-3/Linear PCM Audio Encode
• 2ch ATA/ATAPI Interface
• MPEG2 PS Decode
• AC-3/MPEG1/Linear PCM Audio Decode
C IN
V/Y IN
B 3/3 TUMJ ASSY(3/3)
CN4702
CN2
PLD ALTERA PDY081A
IC1
E MHLP ASSY
(30P)
IC1301 ENC SDRAM 128Mbit
DEC SDRAM 64Mbit
IC1201
CN2001 (2/2) (32P)
CN3001 (2/2) (32P)
IC3501 LA73054
Cr OUT
Cb OUT
Y OUT
C OUT
JA3582
COMPONENT VIDEO OUT
JA3551
VOUT
YOUT
COUT
LOUT
LINE OUT 1
LINE OUT 2
IC3201 PCM1742KE Audio D/A Conv.
IC3251-1/2 UPC4570G2
L OUT
CN3001(2/2)
CN2008(2/2)
SPDIF
JA3081
OPTICAL AC-3/PCM DIGITAL AUDIO OUT
Tuner U-com
CN2005 (19P)
F FLKY ASSY
IC1001 PT6315
FL Driver
FL
Key SW
V1001
CN1001 (19P)

3.1.2 TUMJ ASSY BLOCK DIAGRAM

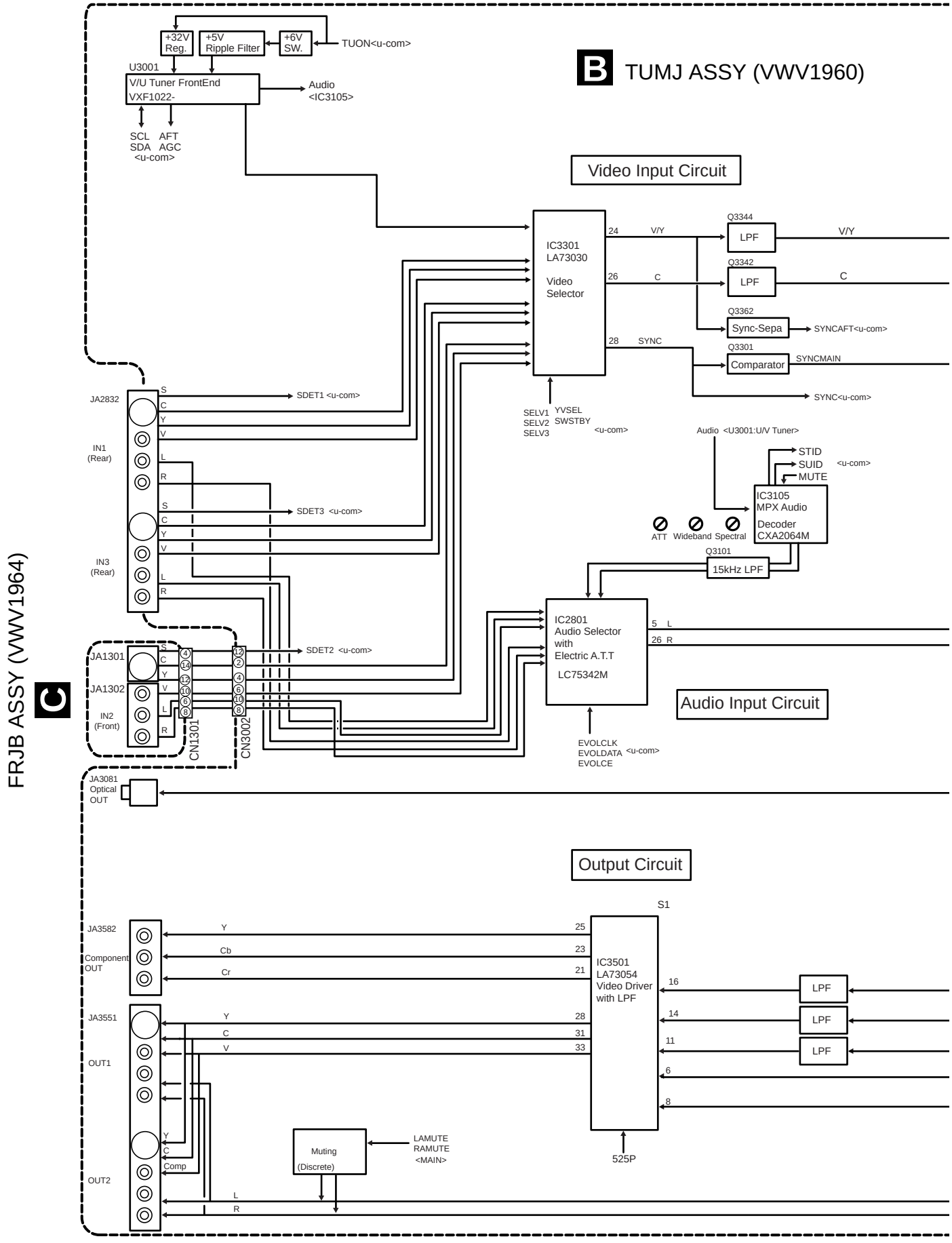

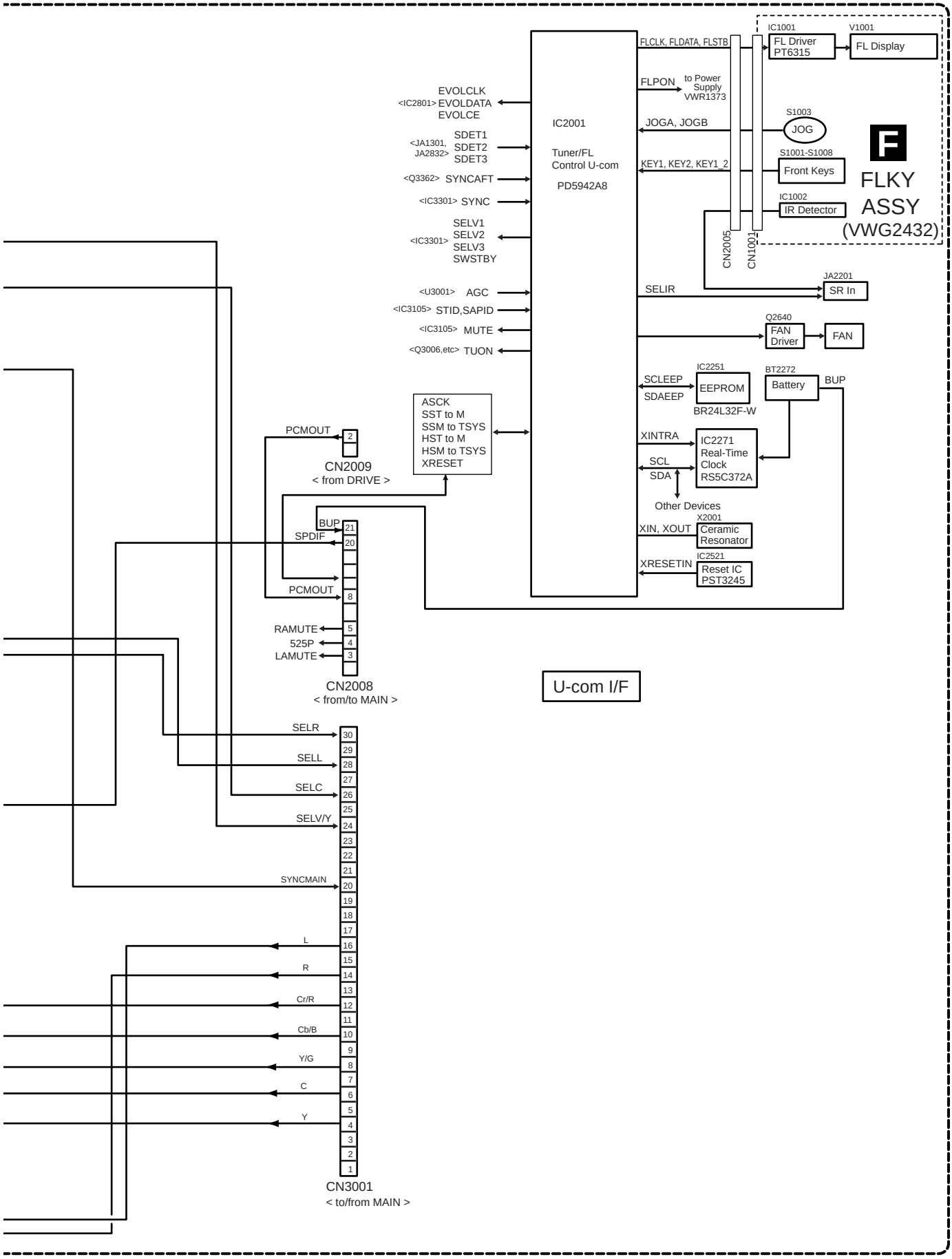
IC1001
V1001
FL Driver PT6315
FL Display
FLCLK, FLDATA, FLSTB
FLPON
to Power Supply VWR1373
S1003
JOG
JOGA, JOGB
S1001-S1008
Front Keys
KEY1, KEY2, KEY1_2
IC1002
IR Detector
F
FLKY ASSY (VWG2432)
CN2005
CN1001
EVOLCLK
<IC2801> EVOLDATA
EVOLCE
IC2001
Tuner/FL Control U-com
PD5942A8
<JA1301, JA2832> SDET1 SDET2 SDET3
<Q3362> SYNCAFT
<IC3301> SYNC
<IC3301> SELV1 SELV2 SELV3 SWSTBY
JA2201
SR In
SELIR
<U3001> AGC
<IC3105> STID,SAPID
<IC3105> MUTE
<Q3006,etc> TUON
Q2640
FAN Driver
FAN
IC2251
BT2272
SCLEEP
SDAEEP
EEPROM
BR24L32F-W
Battery
BUP
ASCK
SST to M
SSM to TSYS
HST to M
HSM to TSYS
XRESET
XINTRA
IC2271 Real-Time Clock RS5C372A
SCL
SDA
Other Devices
X2001
XIN, XOUT
Ceramic Resonator
IC2521
XRESETIN
Reset IC PST3245
PCMOUT
2
CN2009
< from DRIVE >
BUP
21
SPDIF
20
PCMOUT
8
RAMUTE
5
525P
4
LAMUTE
3
CN2008
< from/to MAIN >
U-com I/F
SELR
30
SELL
29
SELC
28
SELV/Y
27
26
25
24
23
22
21
SYNCMAIN
20
19
18
17
L
16
15
R
14
13
Cr/R
12
11
Cb/B
10
9
Y/G
8
7
C
6
5
Y
4
3
2
1
CN3001
< to/from MAIN >

3.1.3 MAIN ASSY BLOCK DIAGRAM

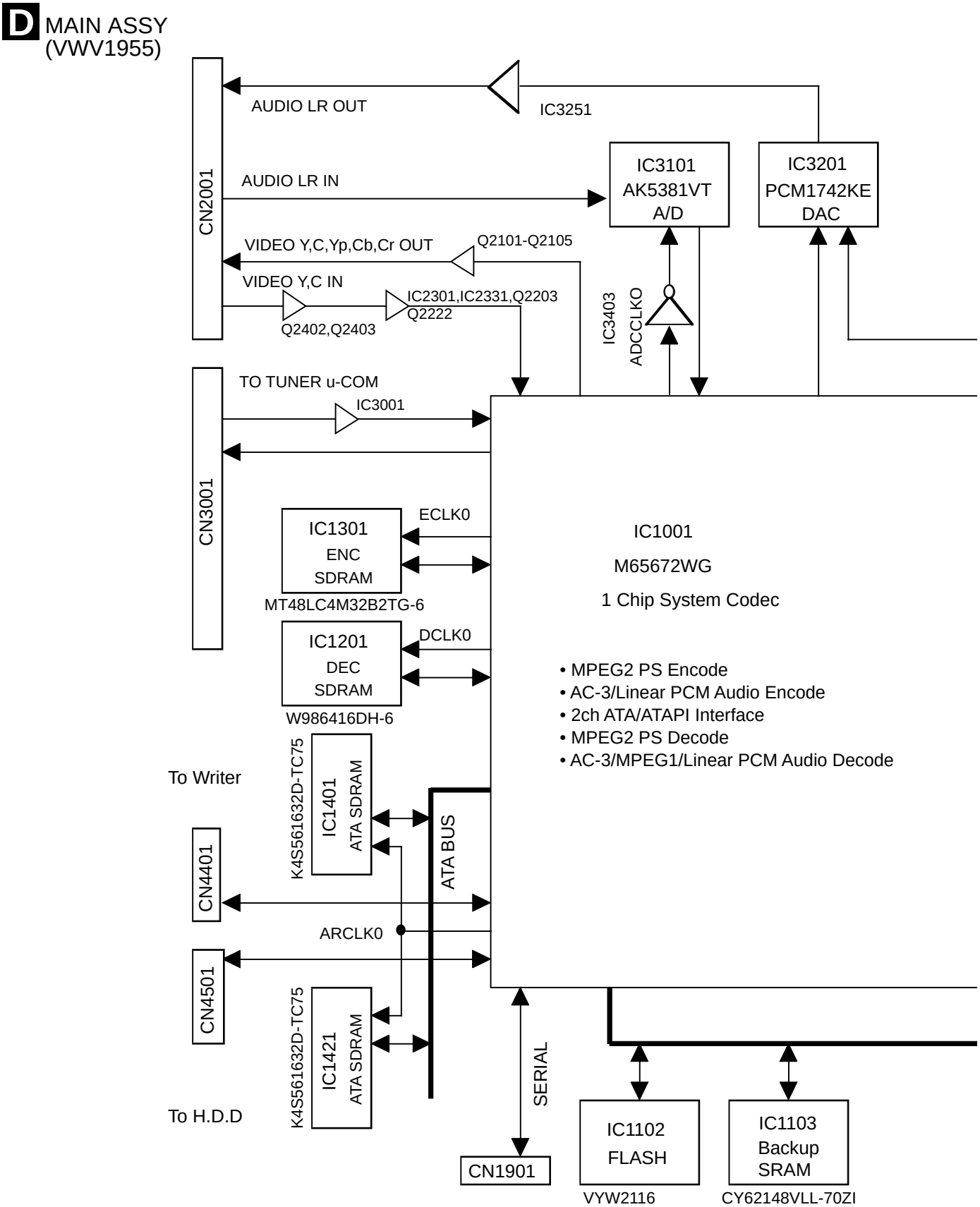

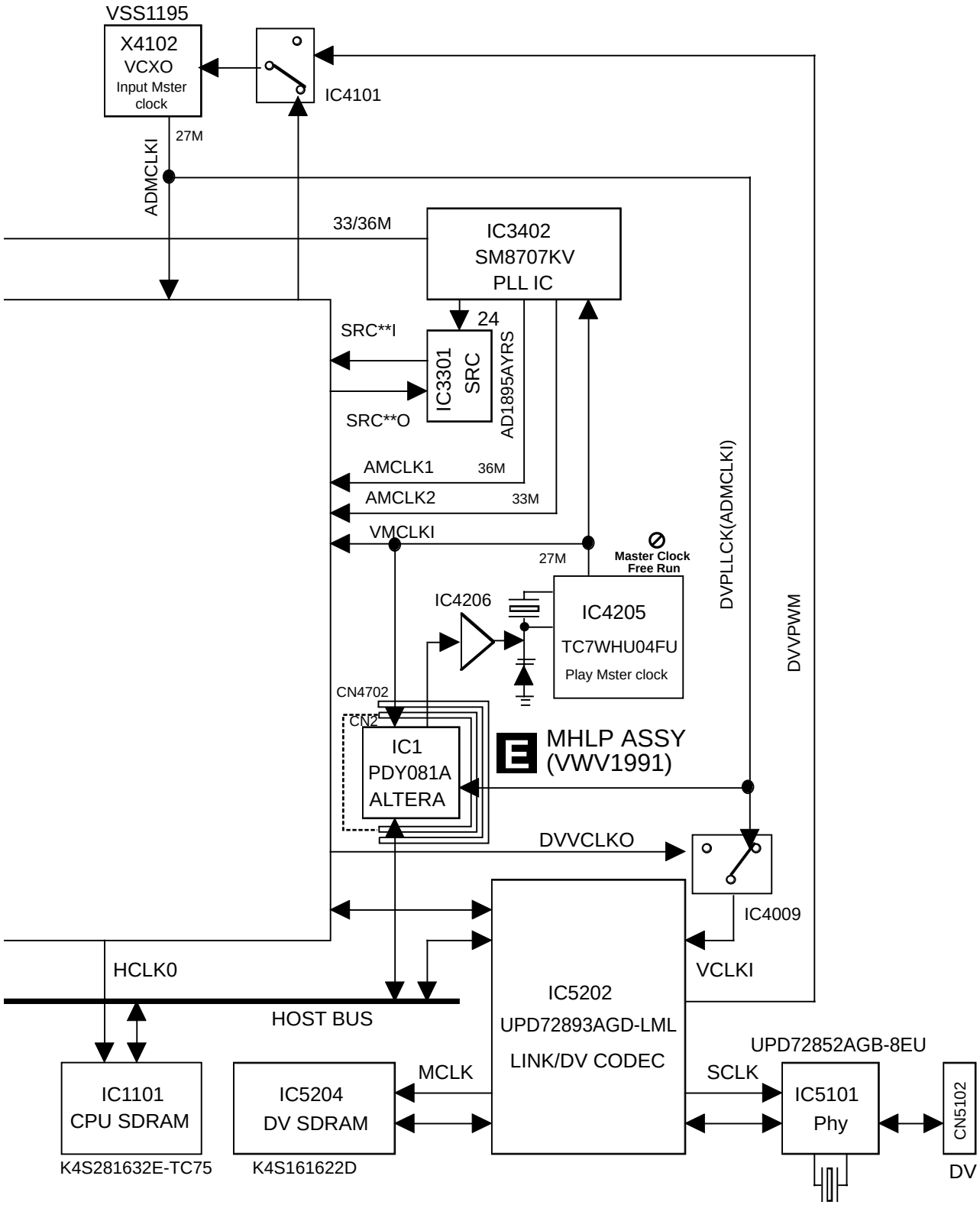
VSS1195
X4102
VCXO
Input Mster clock
IC4101
27M
ADMCLKI
33/36M
IC3402
SM8707KV
PLL IC
24
SRC**I
IC3301
SRC
AD1895AYRS
SRC**O
AMCLK1
36M
AMCLK2
33M
VMCLKI
27M
Master Clock Free Run
DVPLLCK(ADMCLKI)
DVVPWM
IC4206
IC4205
TC7WHU04FU
Play Mster clock
CN4702
CN2
IC1
PDY081A
ALTERA
MHLP ASSY
(VWV1991)
DVVCLKO
IC4009
HCLK0
VCLKI
HOST BUS
IC5202
UPD72893AGD-LML
LINK/DV CODEC
UPD72852AGB-8EU
MCLK
SCLK
IC1101
CPU SDRAM
K4S281632E-TC75
IC5204
DV SDRAM
K4S161622D
IC5101
Phy
CN5102
DV

3.1.4 POWER BLOCK DIAGRAM

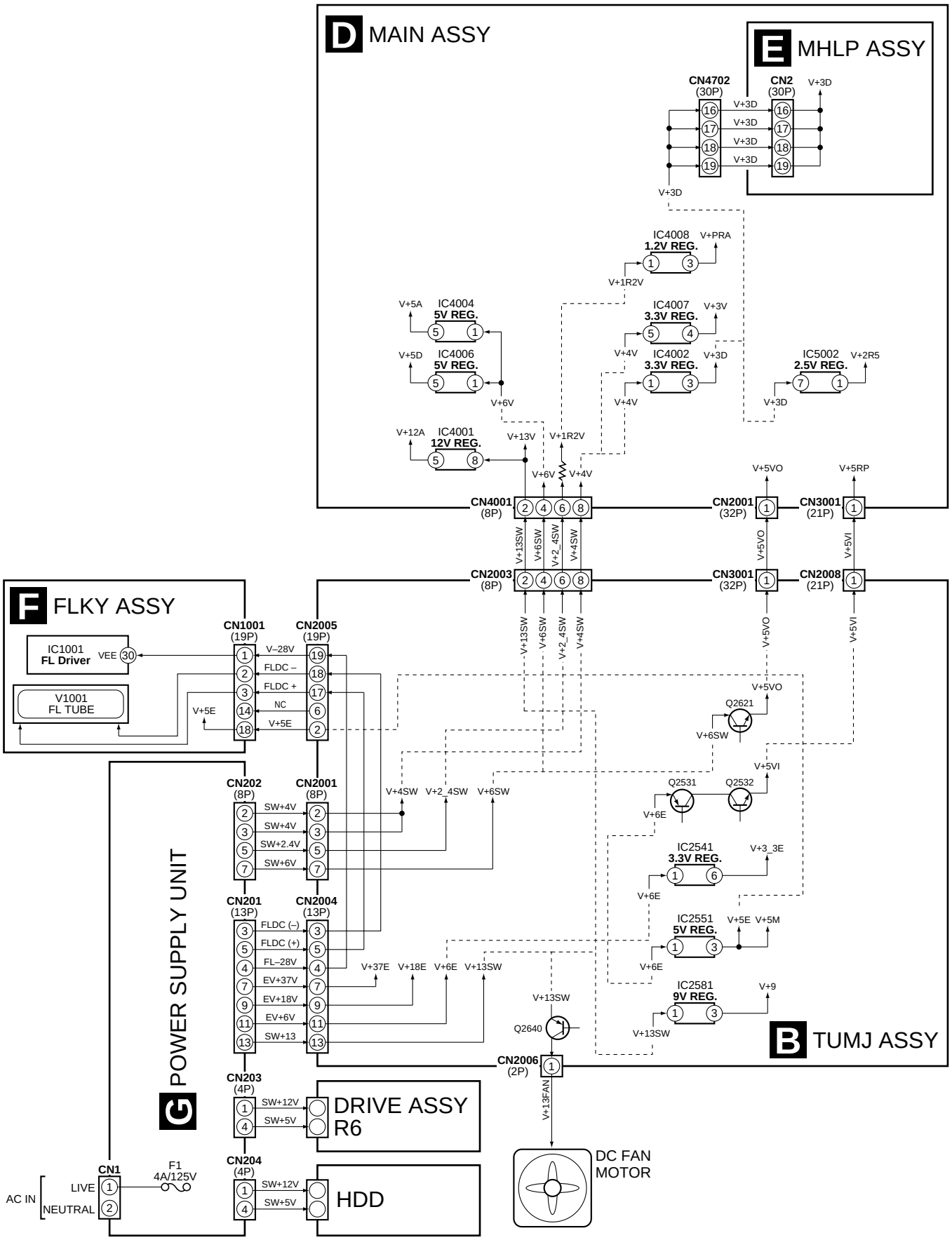

A

B

C

D

E

F

3.2 ATAB ASSY and OVERALL WIRING DIAGRAM

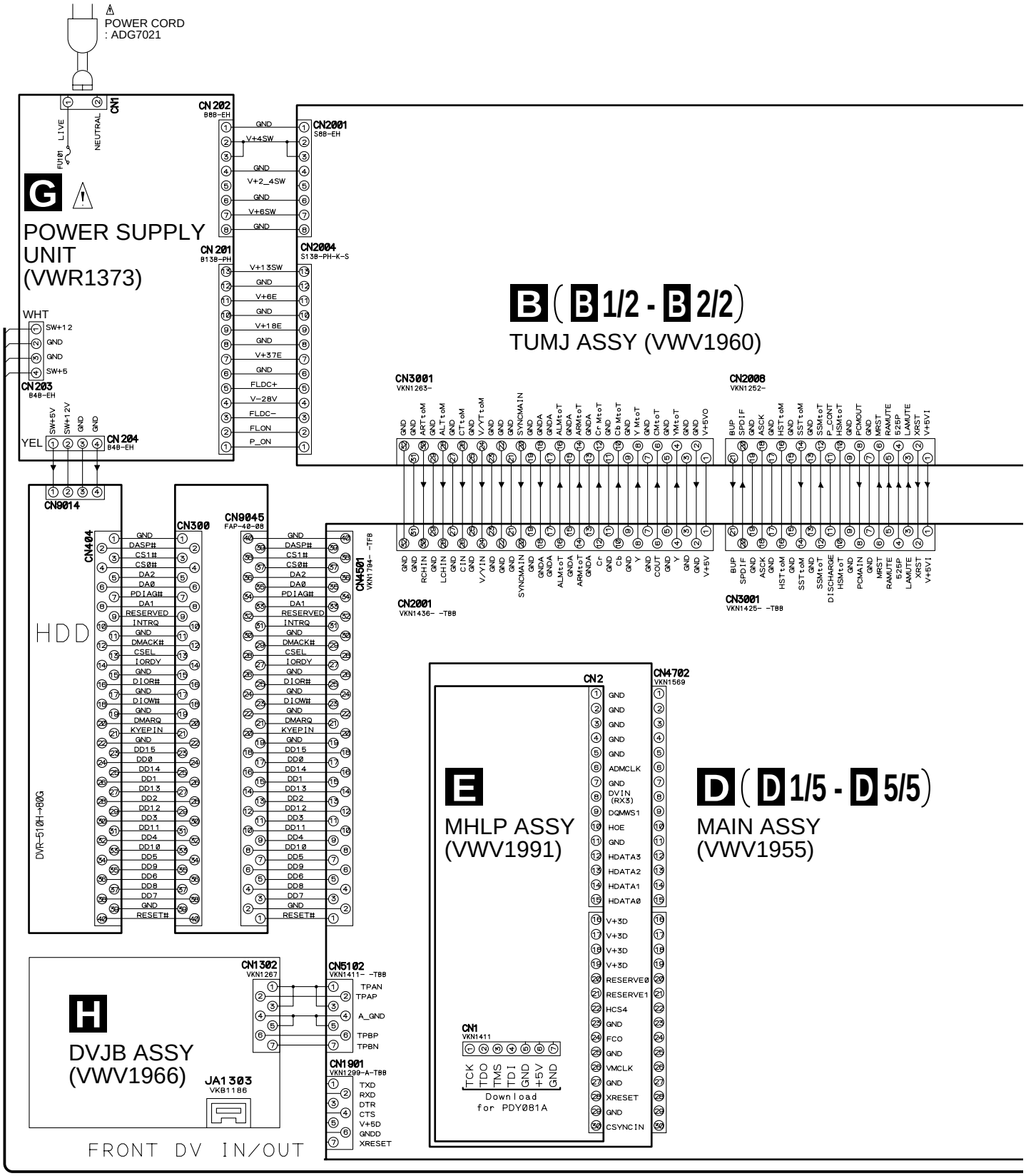

Note : When ordering service parts, be sure to refer to "EXPLODED VIEWS and PARTS LIST" or "PCB PARTS LIST".

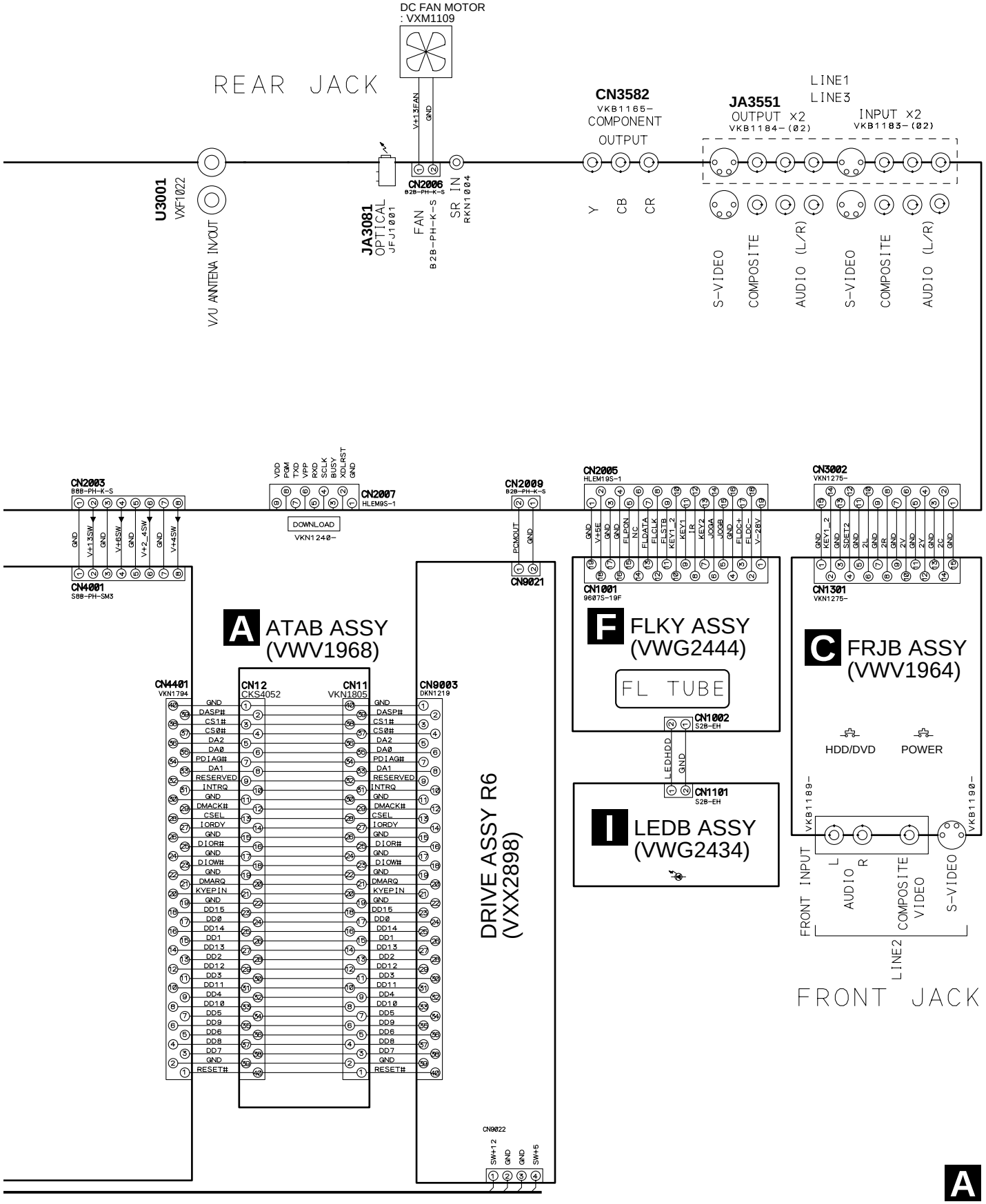

3.3 TUMJ(1/2), FRJB and DVJB ASSYS

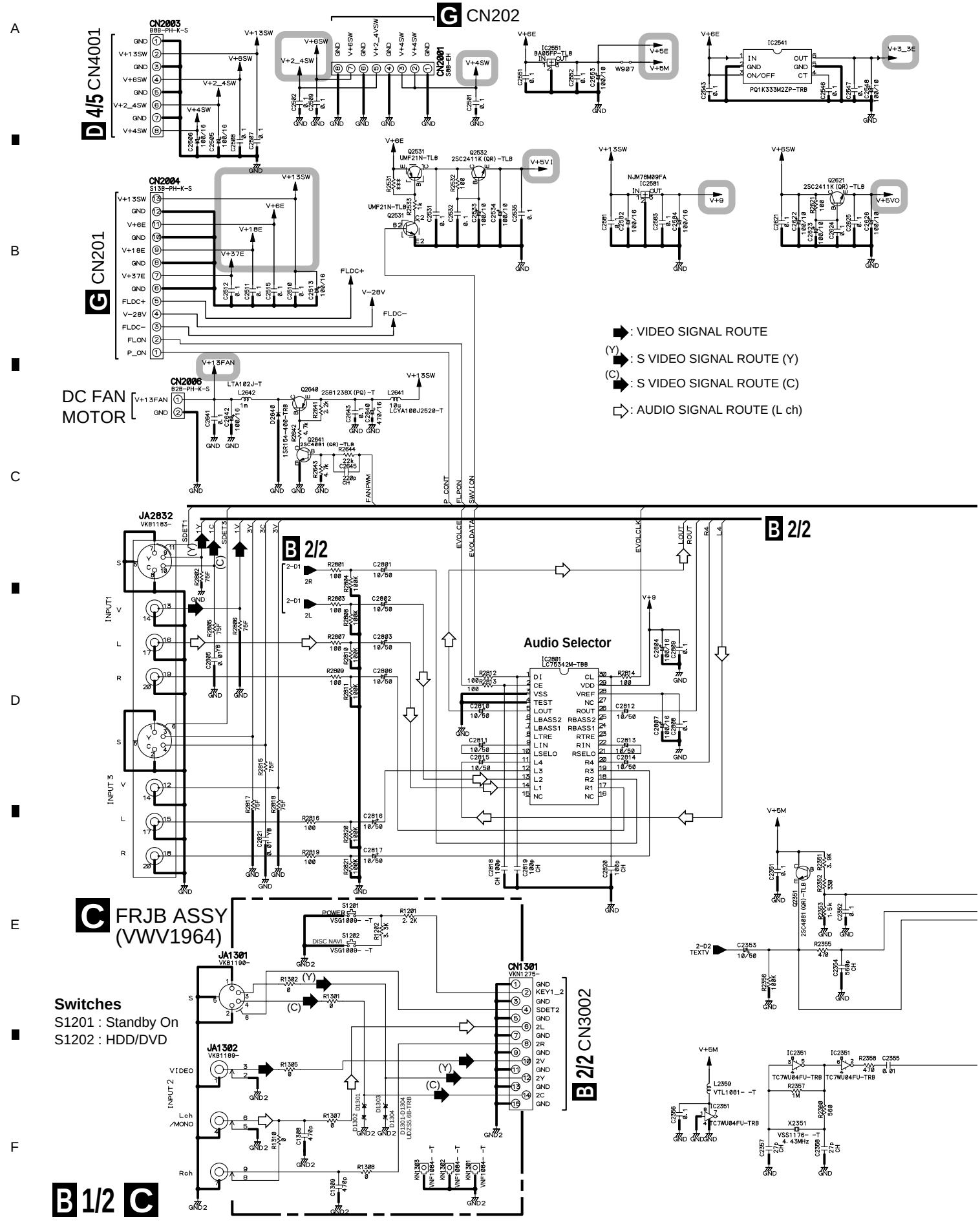

H DVJB ASSY (VWV1966)

D 5/5 CN5102

CN1302 VKN1238-

JA1303 VKB1186-

DV Terminal

B 1/2 TUMJ ASSY (VWV1960)

F CN1001

B 2/2

CN2005 HLEM19S-1

CN2007 HLEM9S-1

JA2201 RKN1004-

SR IN

from DOWN LOAD

*R2075 is mounted on W307.

*L2023 to L2025 is mounted on R2023 to R2025.

*R2196 is mounted on W129 and R2197 is on W126.

IC2001 PD5942A8 (Flash : PD5942A8) (Mask : PD5942B)

TUFL U-com

IC2003 TC74HCT7007AF-TBB

IC2271 RS5C372A-TBB

RTC

IC2251 BR24L32F-W-TBB

EEPROM

BT2272 VEM1033-- LITHIUM BATTERY (CR2032)

: The power supply is shown with the marked box.

B 1/2 H

3.4 TUMJ ASSY(2/2)

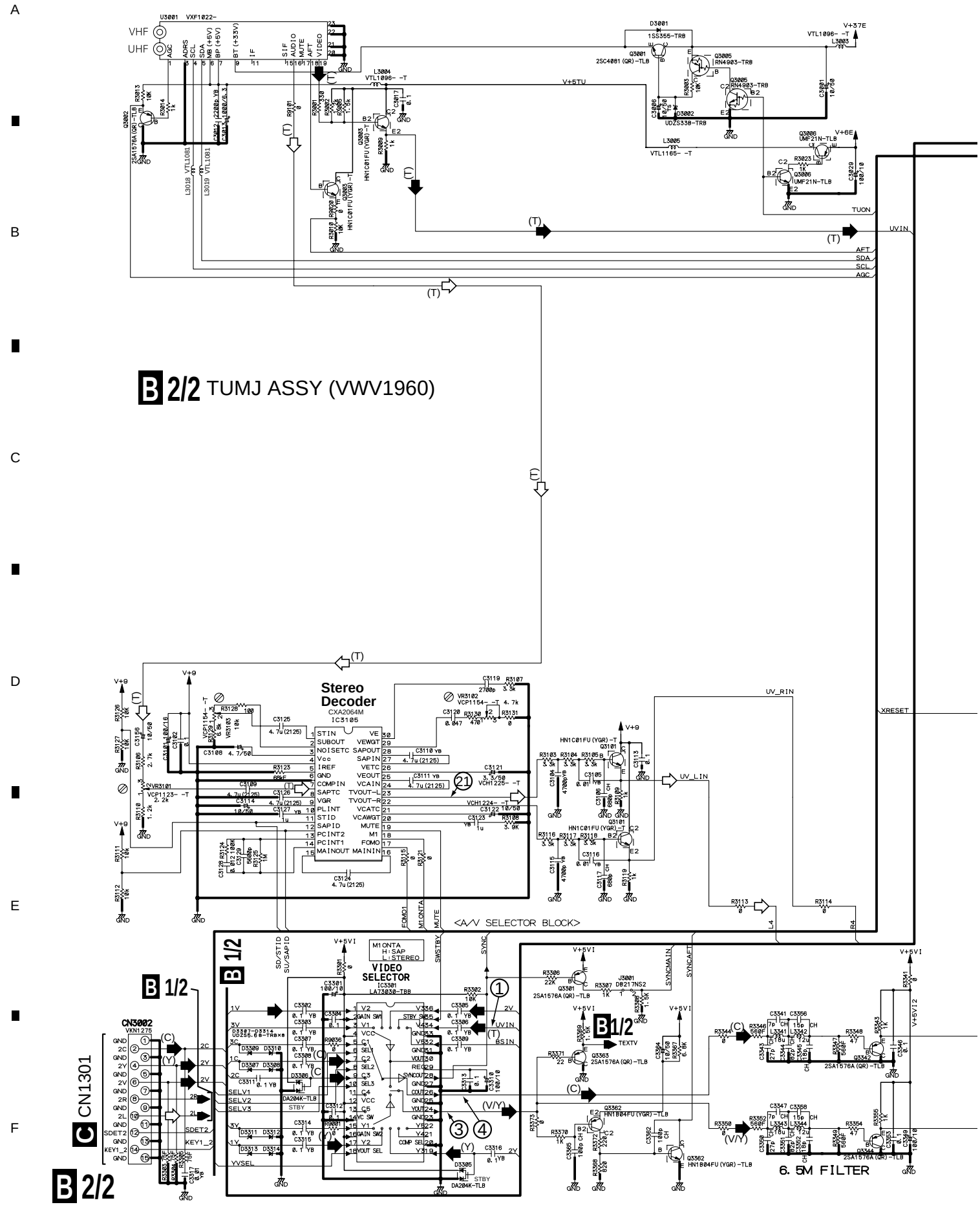

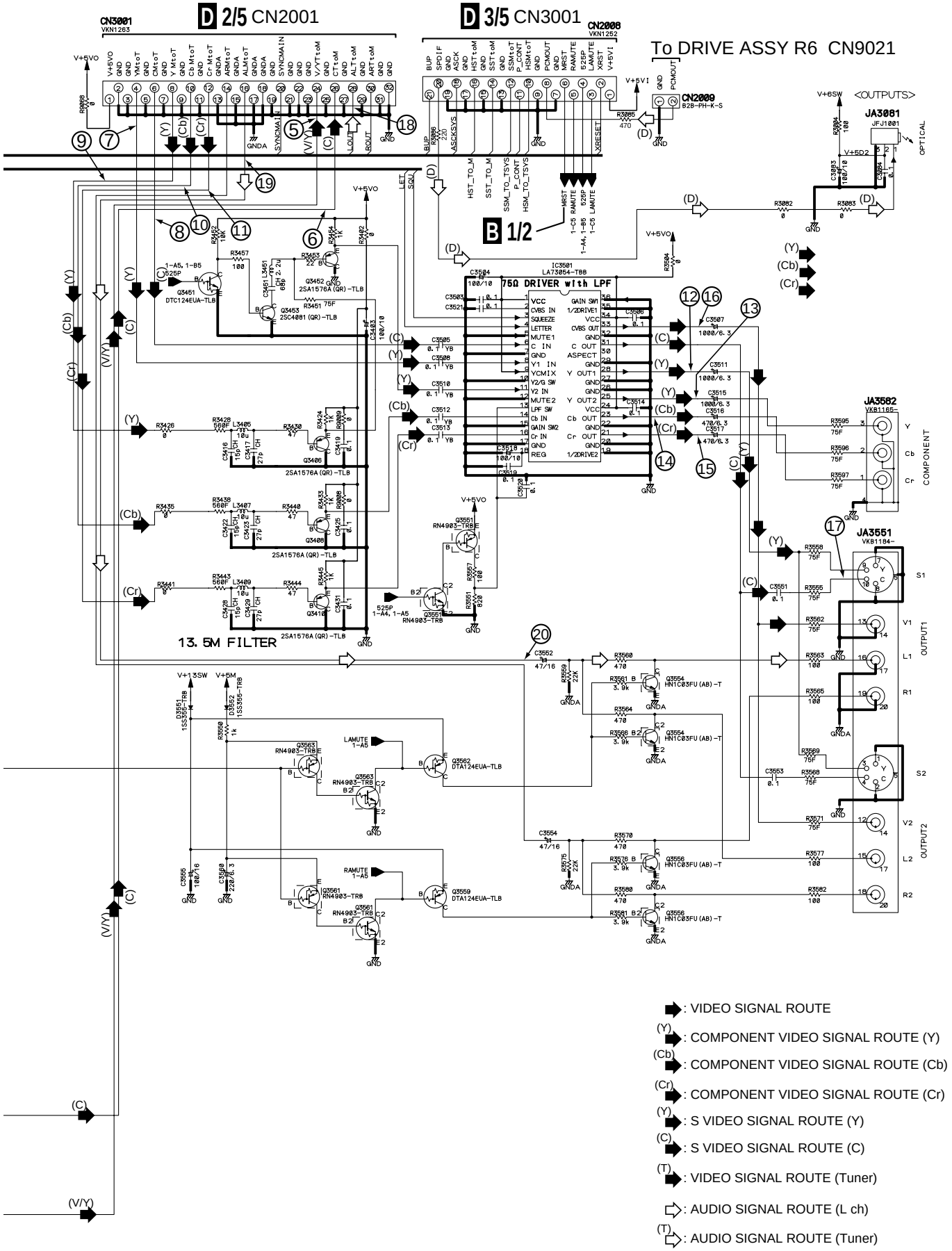

: VIDEO SIGNAL ROUTE

(Y) : COMPONENT VIDEO SIGNAL ROUTE (Y)

(Cb) : COMPONENT VIDEO SIGNAL ROUTE (Cb)

(Cr) : COMPONENT VIDEO SIGNAL ROUTE (Cr)

(Y) : S VIDEO SIGNAL ROUTE (Y)

(C) : S VIDEO SIGNAL ROUTE (C)

(T) : VIDEO SIGNAL ROUTE (Tuner)

: AUDIO SIGNAL ROUTE (L ch)

(T) : AUDIO SIGNAL ROUTE (Tuner)

(D) : AUDIO SIGNAL ROUTE (DIGITAL)

B 2/2

3.5 MAIN ASSY(1/5)

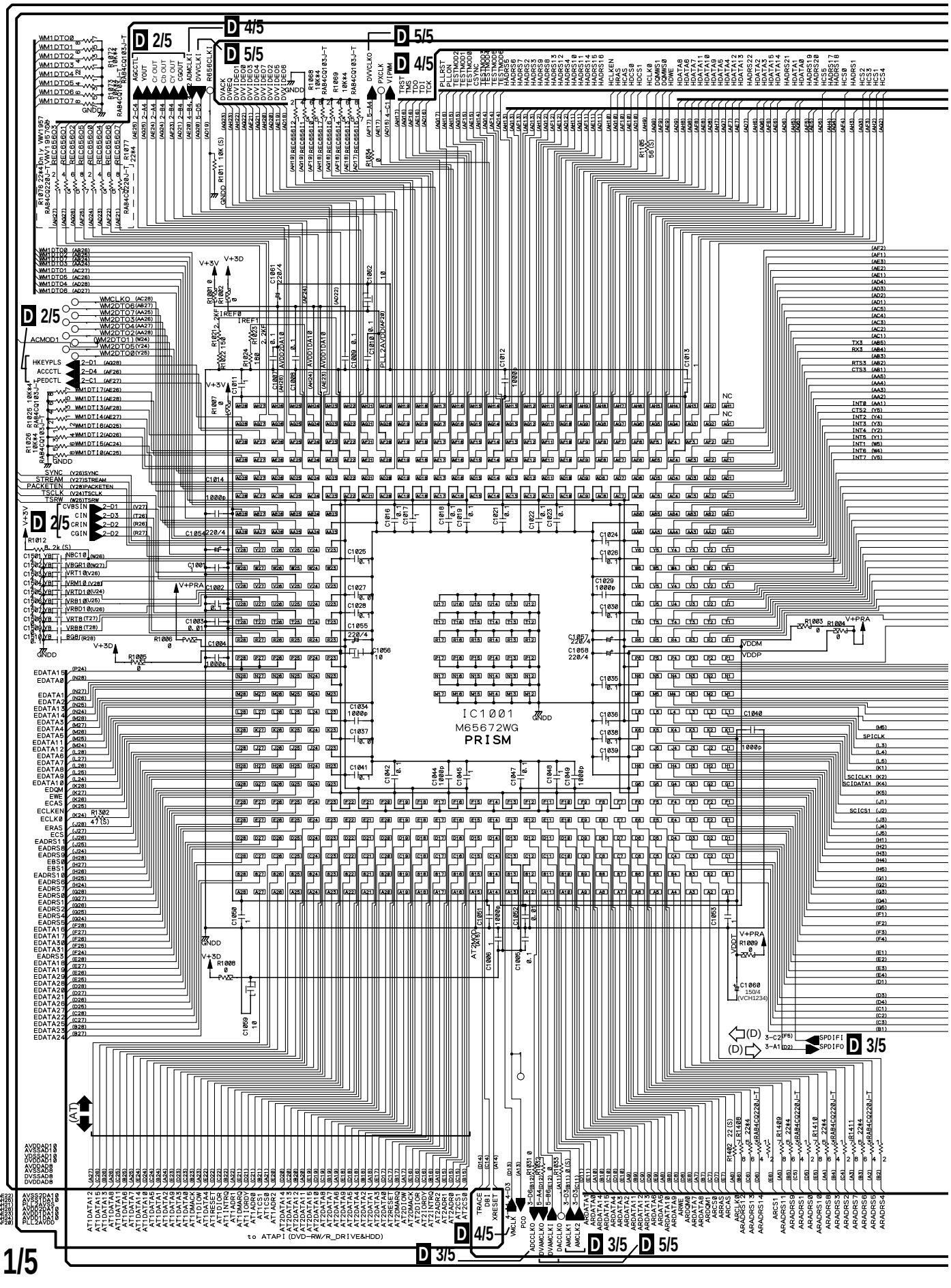

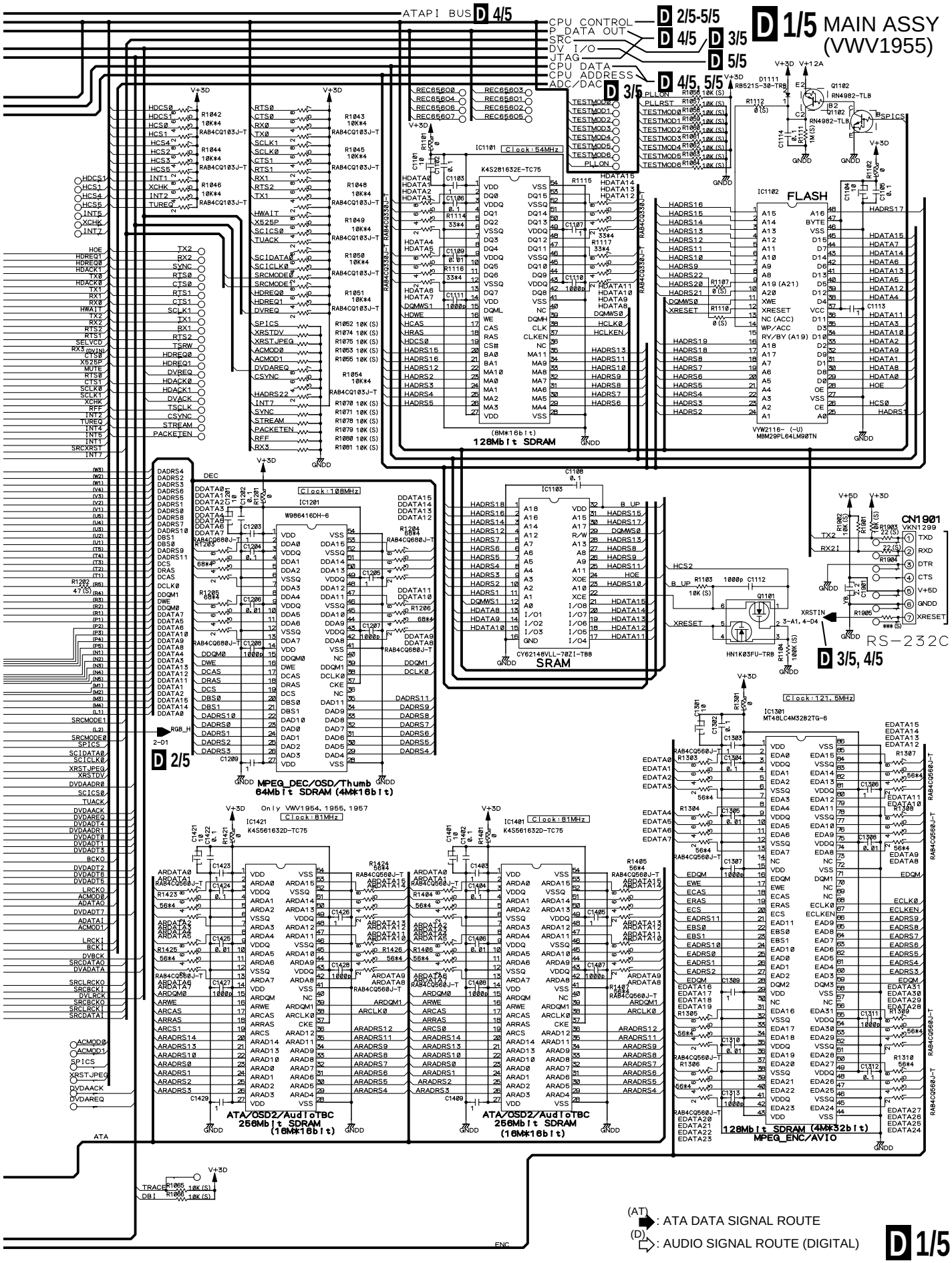
D 1/5 MAIN ASSY (VWV1955)
ATAPI BUS D 4/5
CPU CONTROL D 2/5-5/5
P DATA OUT D 4/5 D 3/5
SRC
DV I/O D 5/5
JTAG
CPU DATA
CPU ADDRESS D 4/5, 5/5
ADC/DAC D 3/5
FLASH
IC1102
VYW2116- (-U)
M8M29PL64LM90TN
128Mbit SDRAM
(8M*16bit)
K4S281632E-TC75
IC1101
Clock:54MHz
MPEG_DEC/OSD/Thumb
64Mbit SDRAM (4M*16bit)
W9864160H-6
IC1201
Clock:108MHz
SRAM
CY62148VLL-70ZI-TBB
IC1103
RS-232C
D 3/5, 4/5
D 2/5
ATA/OSD2/AudioTBC
256Mbit SDRAM
(16M*16bit)
K4S561632D-TC75
IC1421
IC1401
Only VWV1954, 1955, 1957
Clock:81MHz
128Mbit SDRAM (4M*32bit)
MPEG_ENC/AVIO
MT48LC4M32B2TG-6
IC1301
Clock:121.5MHz
HN1K03FU-TRB
Q1101
RB521S-30-TRB
D1111
RN4982-TLB
Q1102
CN1901
VKN1299
(AT) : ATA DATA SIGNAL ROUTE
(D) : AUDIO SIGNAL ROUTE (DIGITAL)
D 1/5

3.6 MAIN ASSY(2/5)

D 2/5 MAIN ASSY (VWV1955)

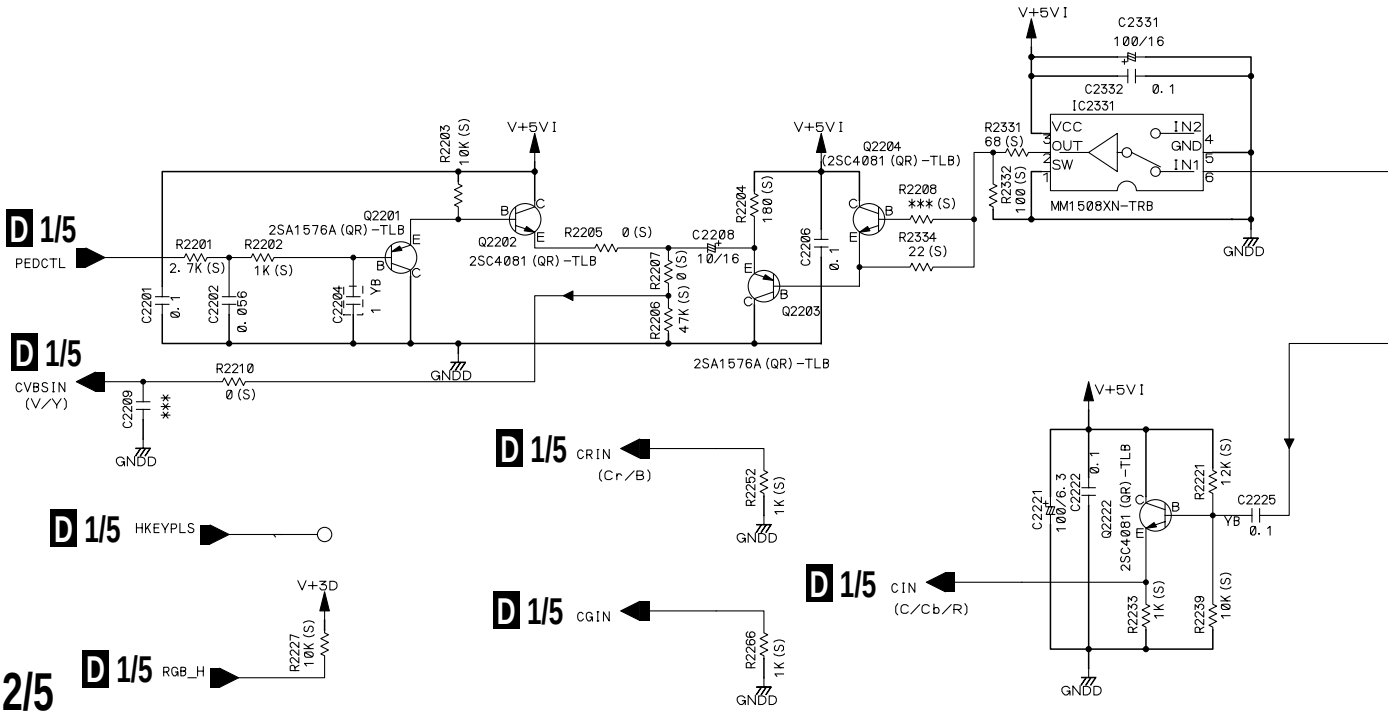

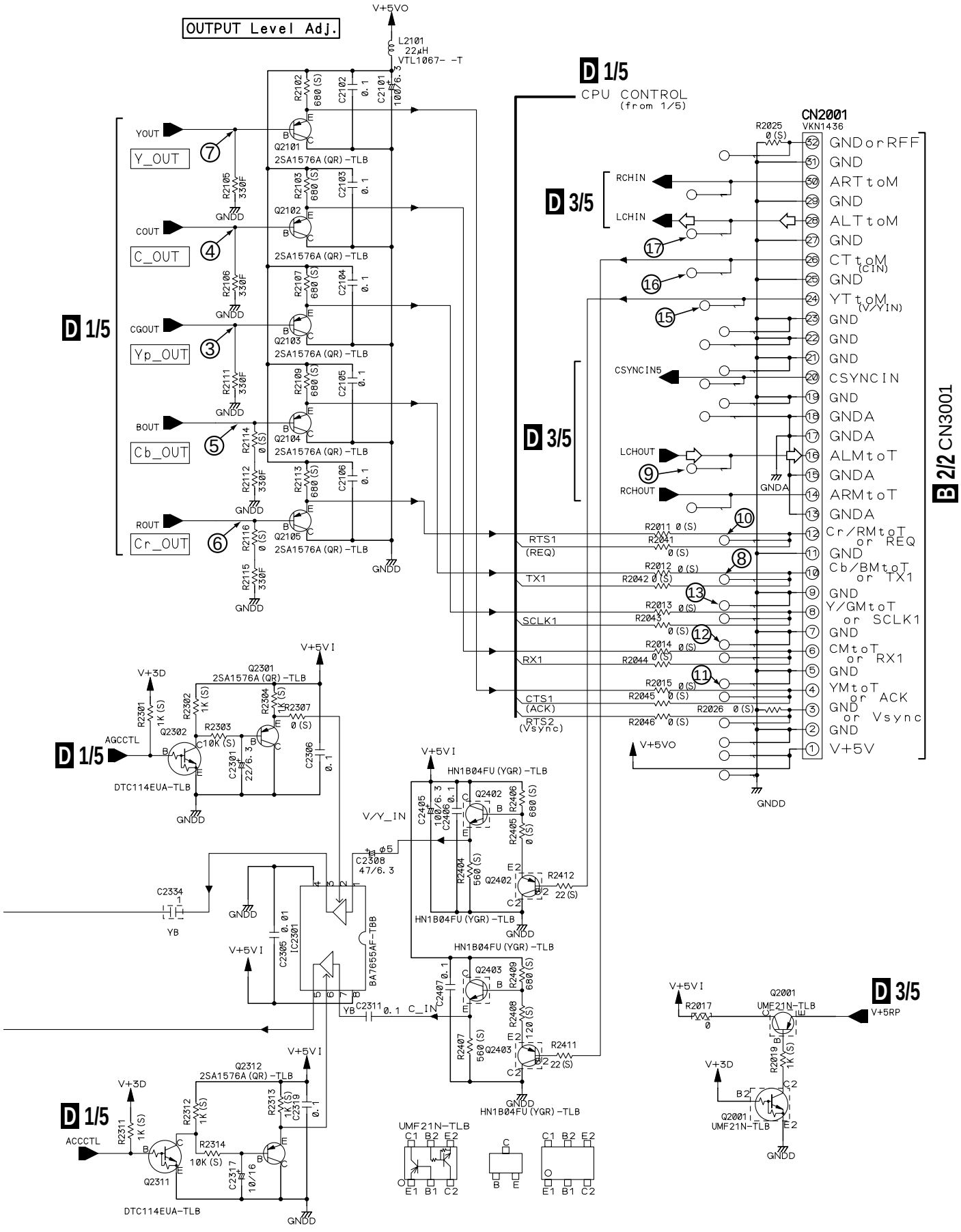
OUTPUT Level Adj.
V+5VO
L2101 22µH VTL1067- -T
D 1/5
CPU CONTROL (from 1/5)
CN2001 VKN1436
D 3/5
B 2/2 CN3001
YOUT
Y_OUT
COUT
C_OUT
CGOUT
Yp_OUT
BOUT
Cb_OUT
ROUT
Cr_OUT
Q2101 2SA1576A(QR)-TLB
Q2102 2SA1576A(QR)-TLB
Q2103 2SA1576A(QR)-TLB
Q2104 2SA1576A(QR)-TLB
Q2105 2SA1576A(QR)-TLB
GNDD
RCHIN
LCHIN
CSYNCIN5
LCHOUT
RCHOUT
RTS1 (REQ)
TX1
SCLK1
RX1
CTS1 (ACK)
RTS2 (Vsync)
GNDorRFF
ARTtoM
ALTtoM
CTtoM (C1N)
YTtoM (V/YIN)
CSYNCIN
ALMtoT
ARMtoT
Cr/RMtoT or REQ
Cb/BMtoT or TX1
Y/GMtoT or SCLK1
CMtoT or RX1
YMtoT or ACK
GND or Vsync
V+5V
GNDA
V+5VI
V+3D
Q2301 2SA1576A(QR)-TLB
Q2302
DTC114EUA-TLB
AGCCTL
V/Y_IN
HN1B04FU(YGR)-TLB
Q2402
Q2403
C_IN
YB
IC2301 BA7655AF-TBB
Q2312 2SA1576A(QR)-TLB
Q2311
ACCCTL
UMF21N-TLB
Q2001
V+5RP
: AUDIO SIGNAL ROUTE (L ch)
D 2/5

3.7 MAIN ASSY(3/5)

D 3/5 MAIN ASSY (VWV1955)

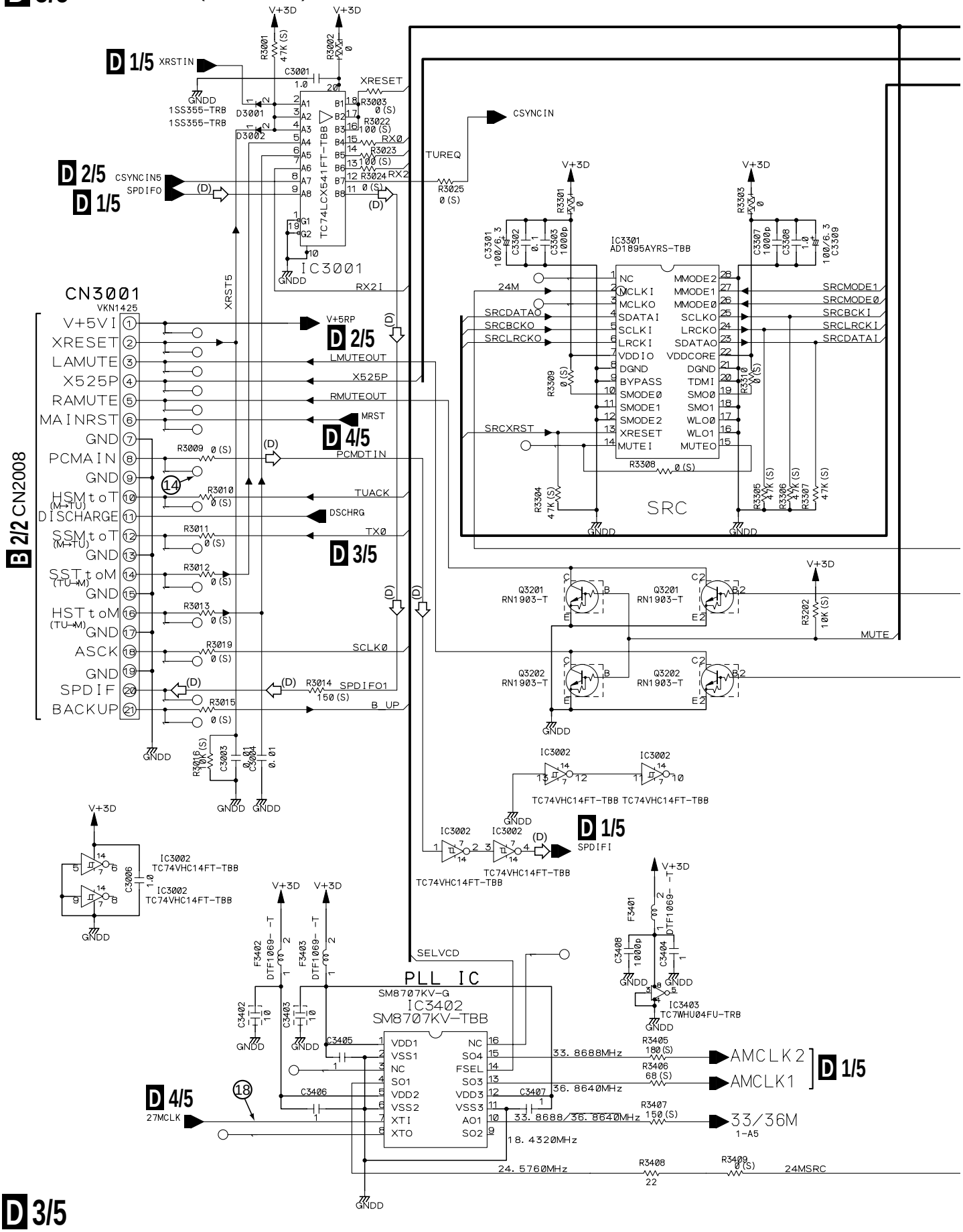

: AUDIO SIGNAL ROUTE (L ch)

(D) : AUDIO SIGNAL ROUTE (DIGITAL)

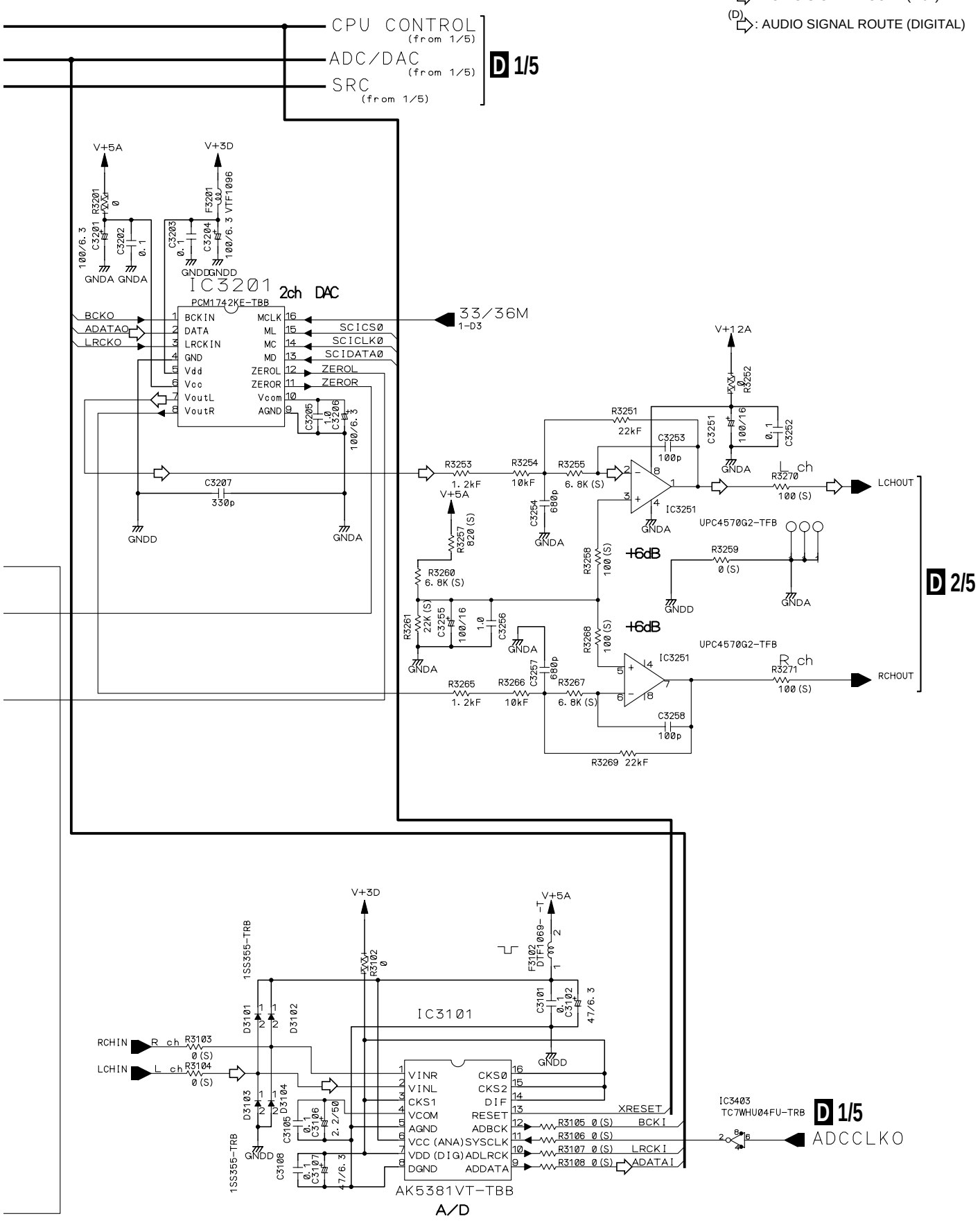

3.8 MAIN ASSY(4/5)

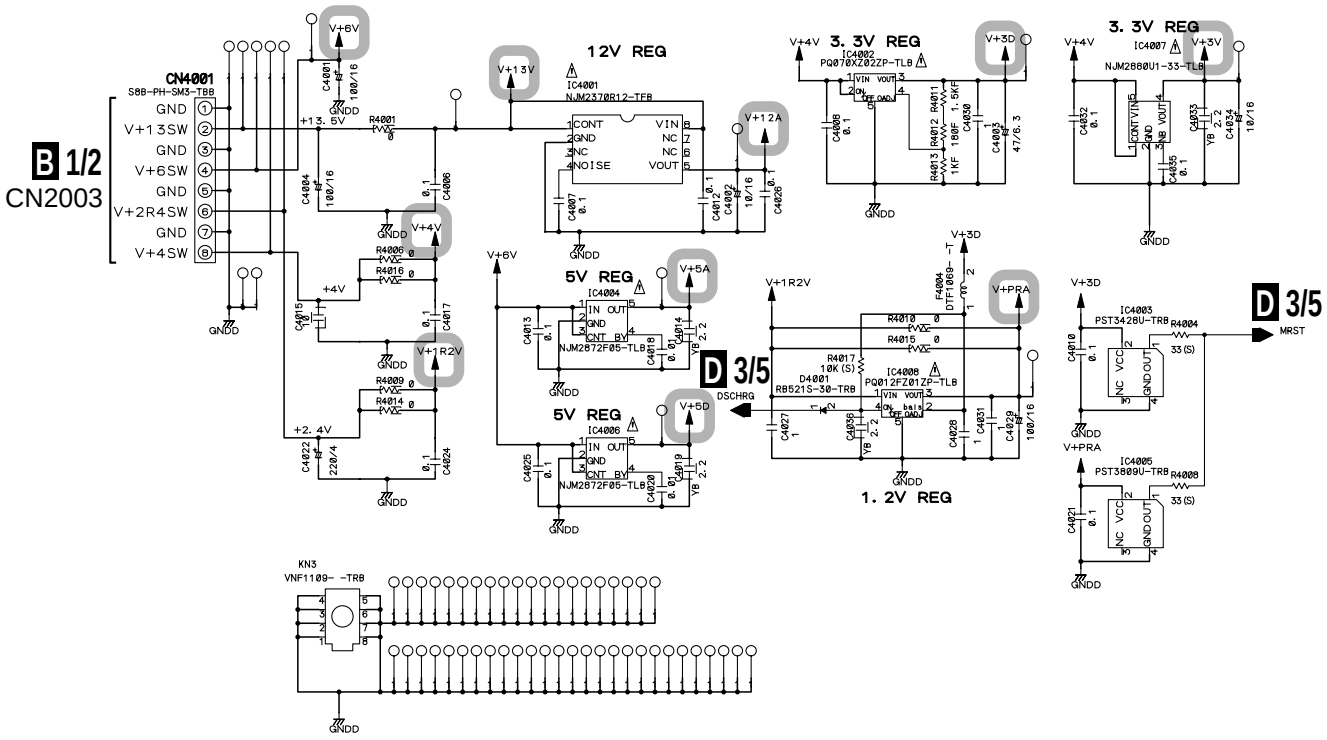

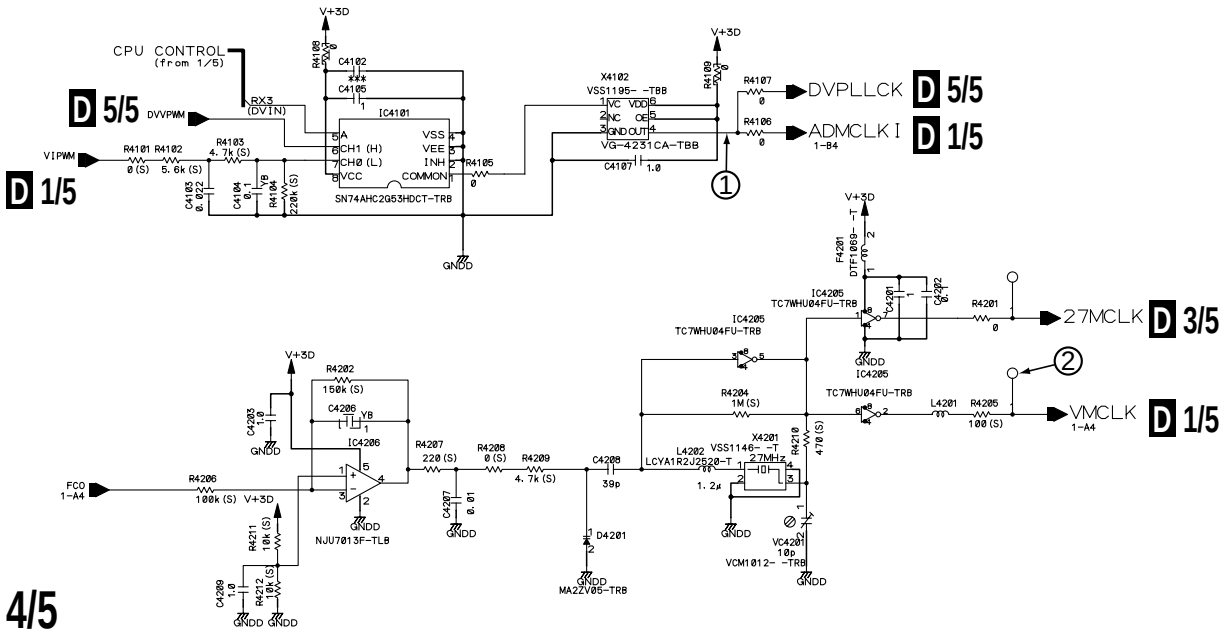

D 4/5 MAIN ASSY (VWV1955)

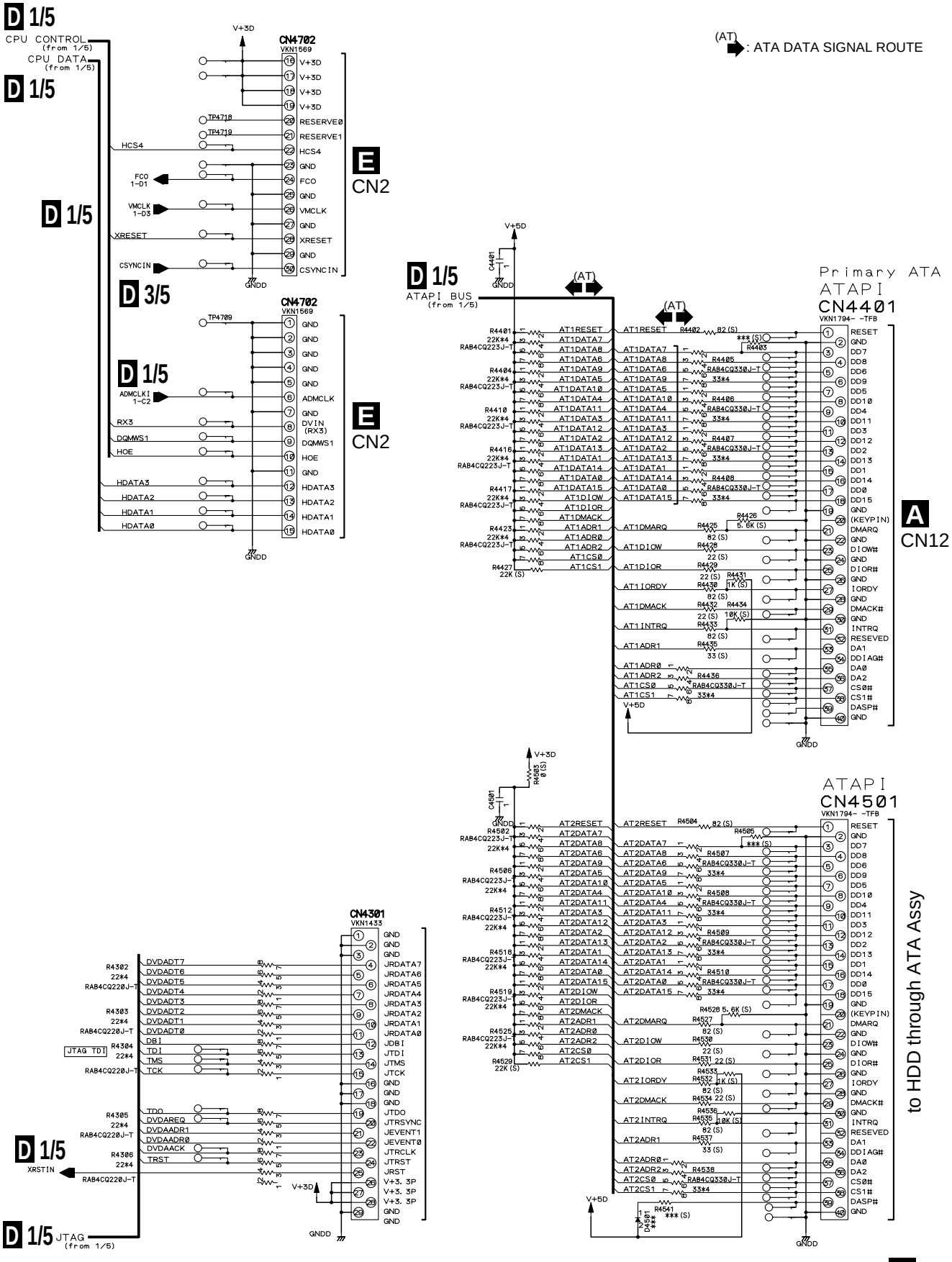

3.9 MAIN ASSY(5/5)

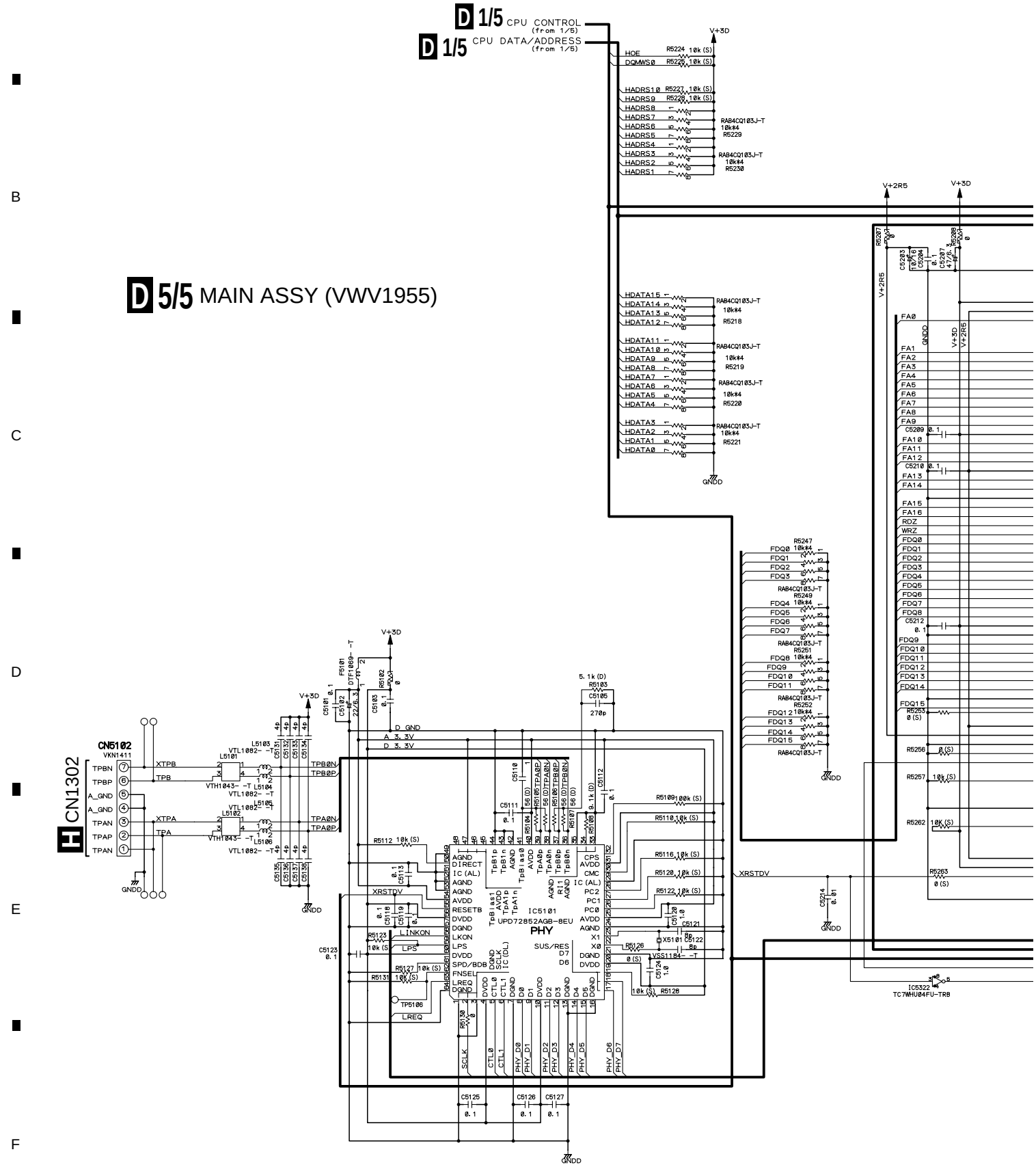

D 5/5

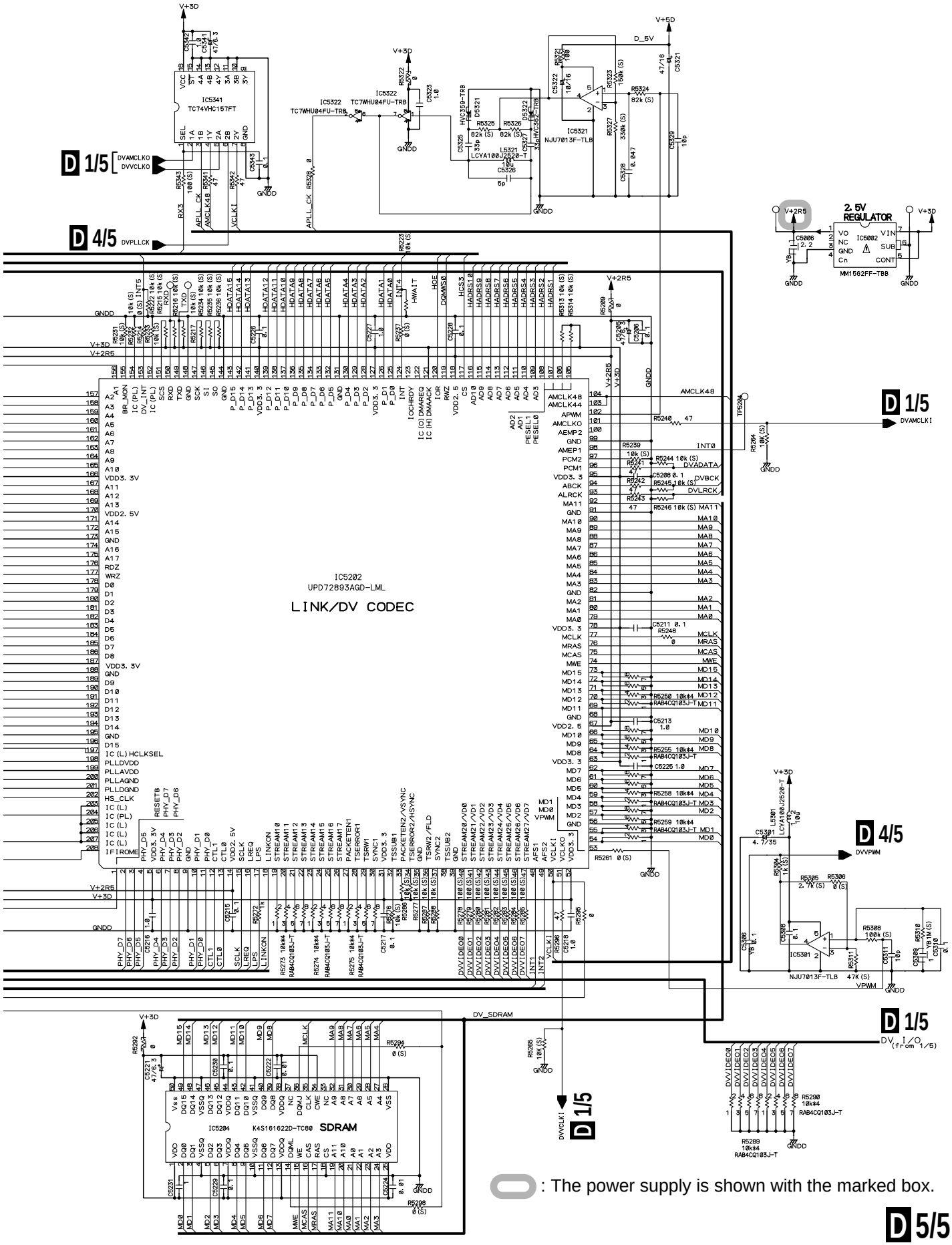
D 1/5
D 4/5
D 1/5
D 4/5
D 1/5
D 1/5
D 5/5
IC5202
UPD72893AGD-LML
LINK/DV CODEC
IC5204 K4S161622D-TC80 SDRAM
IC5341 TC74VHC157FT
IC5321 NJU7013F-TLB
IC5322 TC7WHU04FU-TRB
IC5301 NJU7013F-TLB
2.5V REGULATOR
IC5002 MM1562FF-T88
DVAMCLKO
DVVCLKO
DVPLLCK
DVAMCLKI
DVVPWM
DV_I/O (from 1/5)
DV_SDRAM
DVCLK1
: The power supply is shown with the marked box.
DVR-510H-S
37

3.10 MHLP ASSY

E MHLP ASSY (VWV1991)

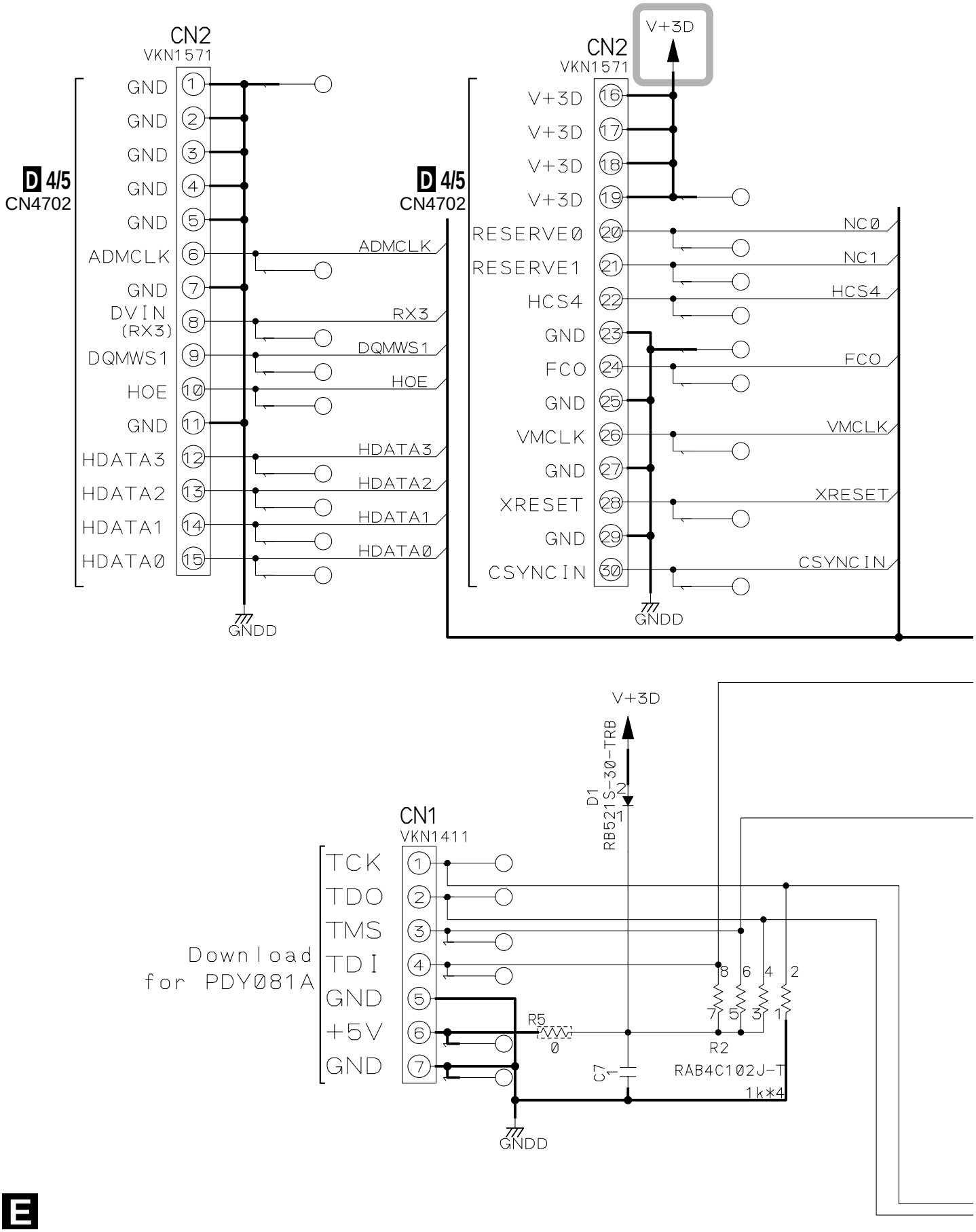

: The power supply is shown with the marked box.

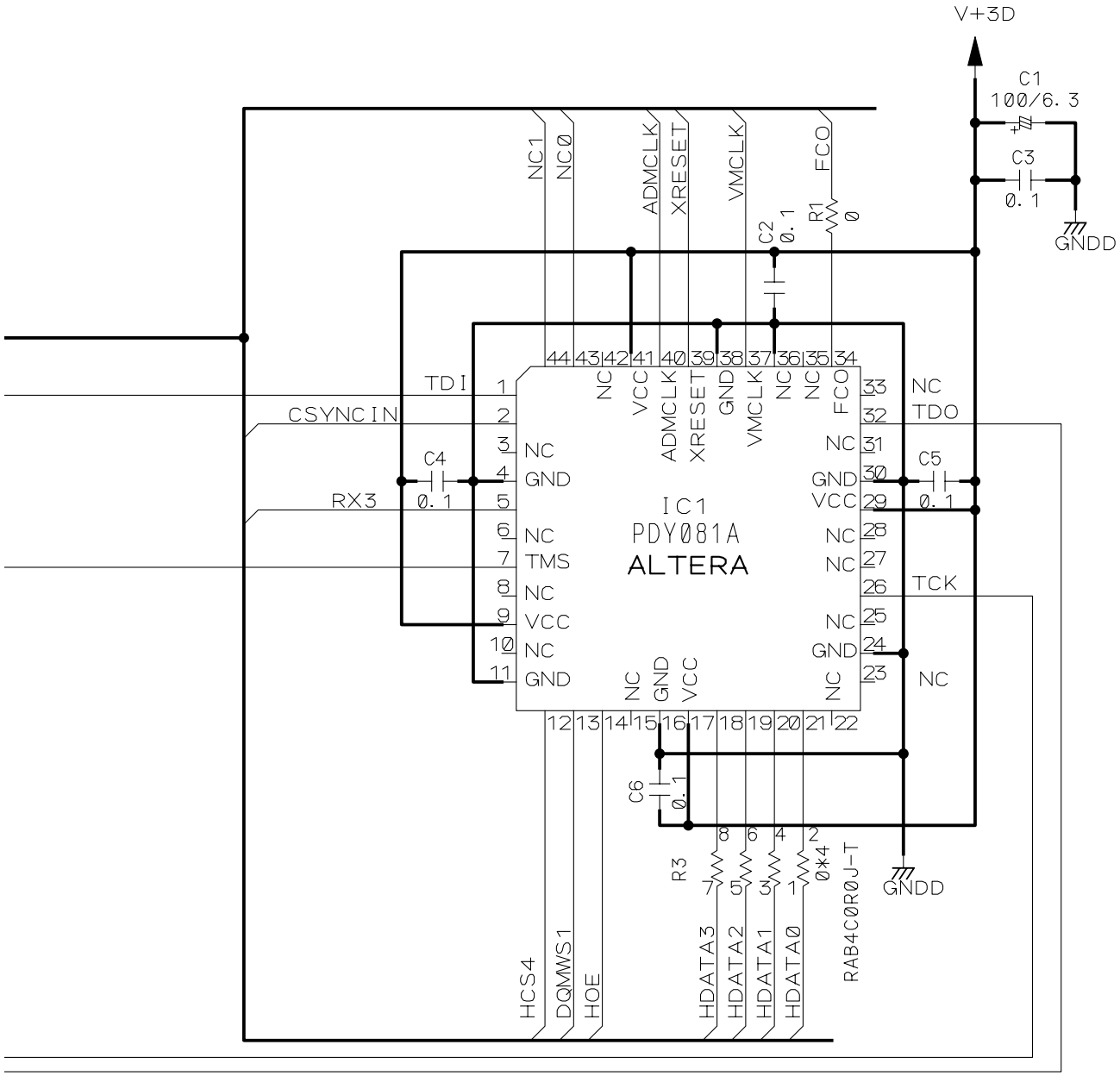

3.11 FLKY and LEDB ASSYS

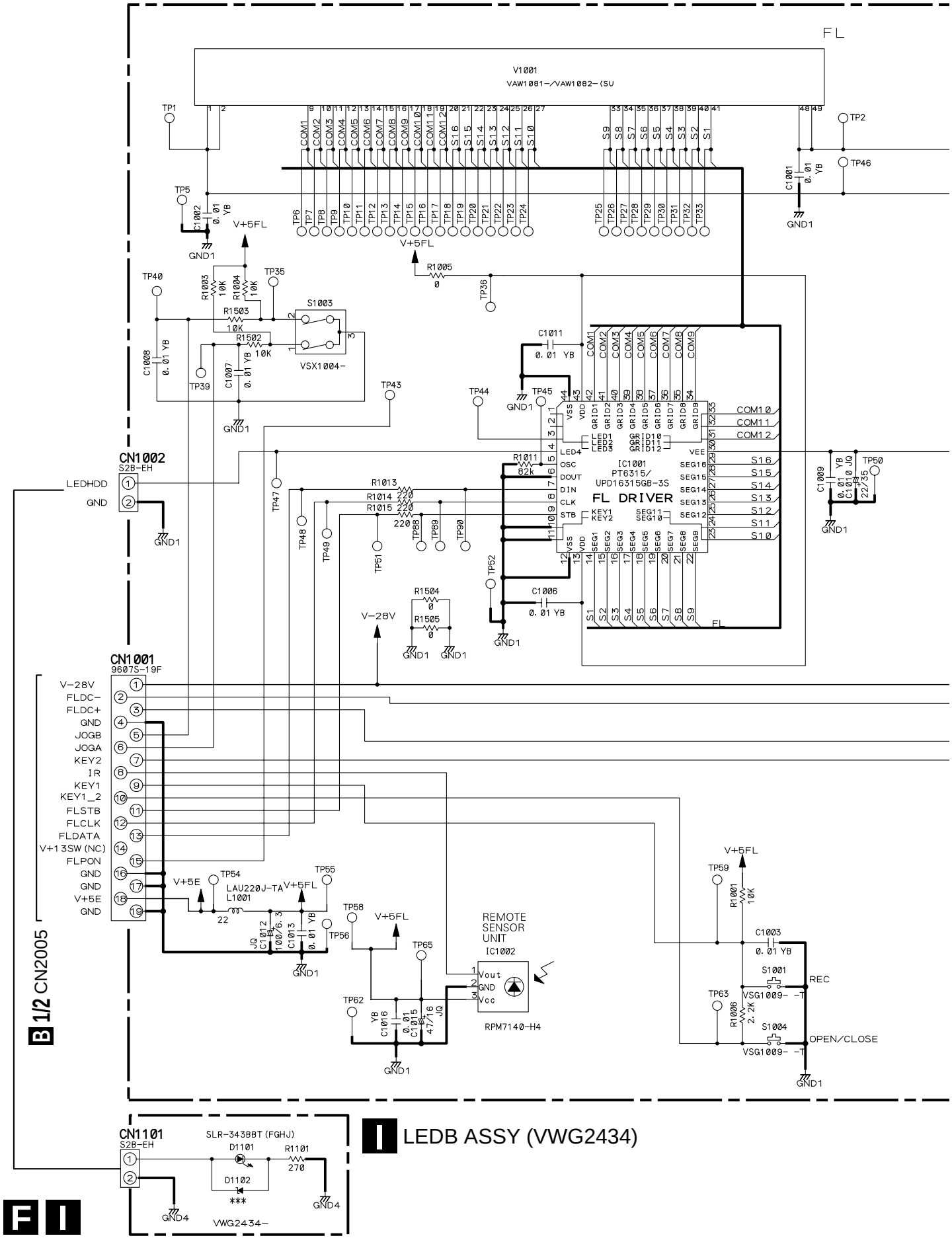

F FLKY ASSY (VWG2444)

Switches

S1001 : REC
S1002 : PLAY
S1003 : SMART JOG
S1004 : OPEN/CLOSE
S1005 : FUNCTION
S1006 : STOP
S1007 : PAUSE
S1008 : REC STOP

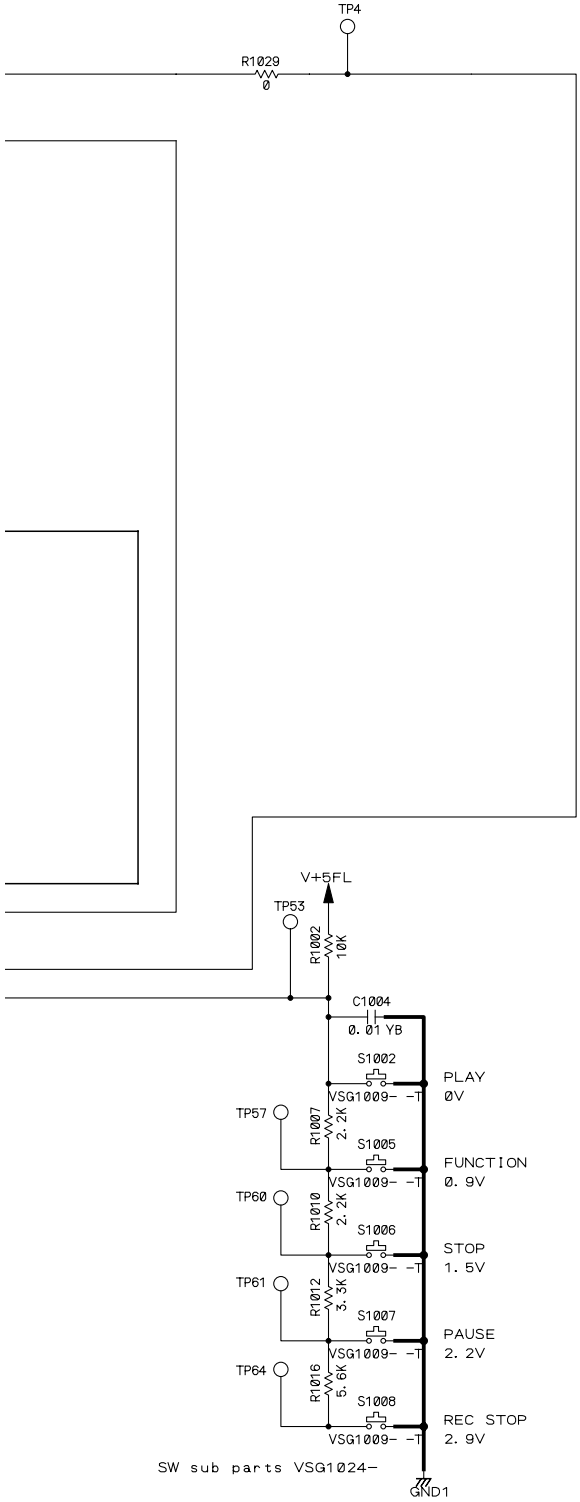

3.12 POWER SUPPLY UNIT

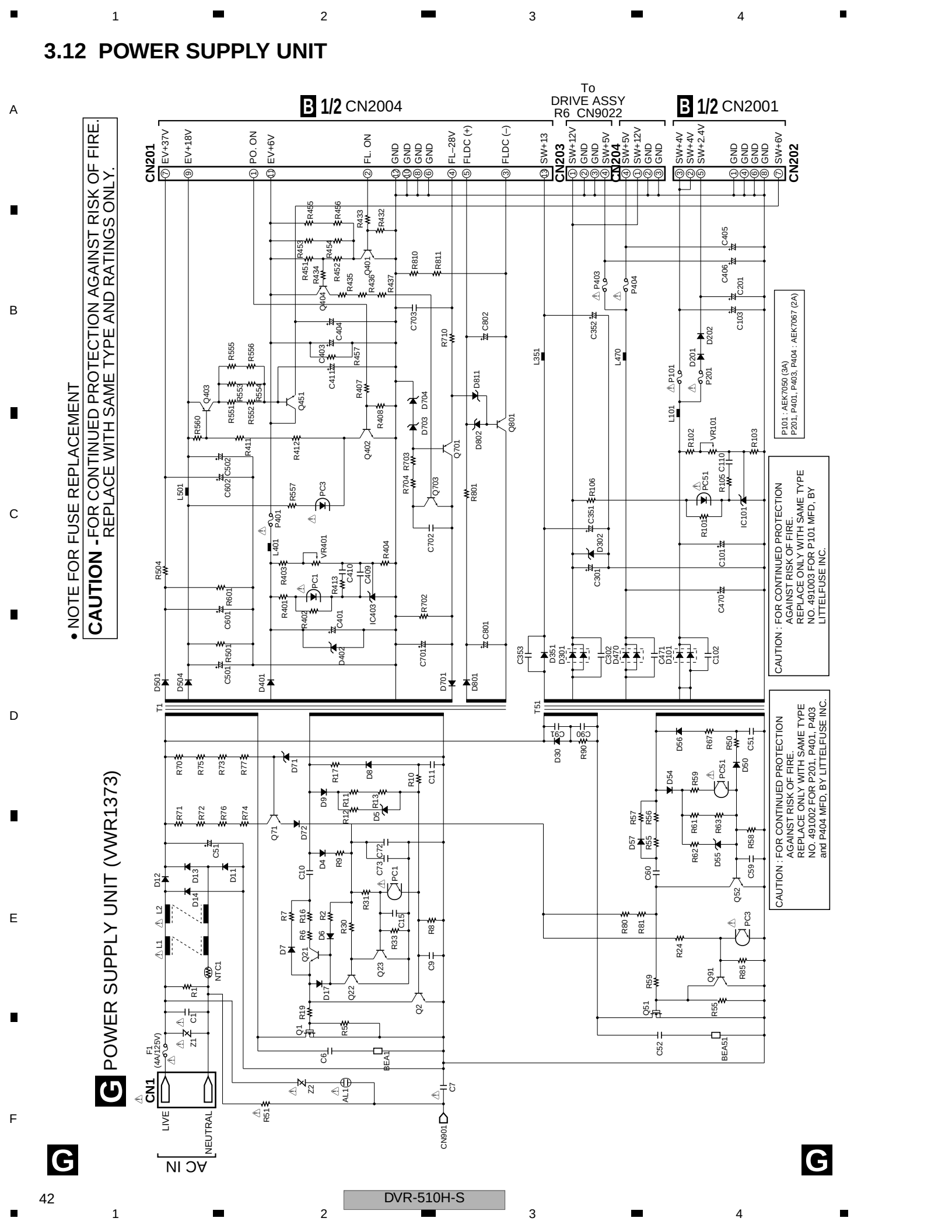

3.13 WAVE FORMS

Note : The encircled numbers denote measuring point in the schematic diagram.

B TUMJ ASSY

Measurement condition ;
No.1 to No.6 : 75% Color-bar
No.7 to No.17 : 75% Color-bar, A1 disc 2-20
No.18 : 1kHz, 2Vrms
No.19, No.20 : 1kHz, 2Vrms, A1 disc 2-1
No.21 : 1kHz, MONO, 60% modulation

(1) UVIN jumper as same as C3306 (UVIN) (Function : 1 ch)
V: 500mV/div. H: 10µsec/div.

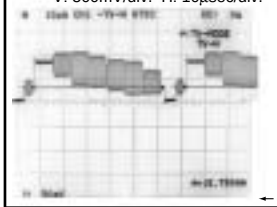

(3) IC3301-pin 24 (Y) (Function : L1)
V: 500mV/div. H: 10µsec/div.

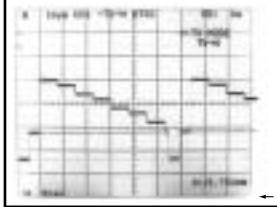

(4) IC3301-pin 26 (C) (Function : L1)
V: 500mV/div. H: 10µsec/div.

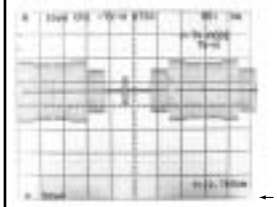

(5) CN3001-pin 24 (Y) (Function : L1)
V: 500mV/div. H: 10µsec/div.

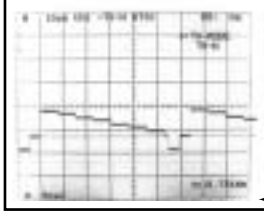

(6) CN3001-pin 26 (C) (Function : L1)
V: 500mV/div. H: 10µsec/div.

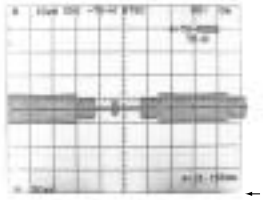

(7) CN3001-pin 4 (Y) (Function : PLAY)
V: 500mV/div. H: 10µsec/div.

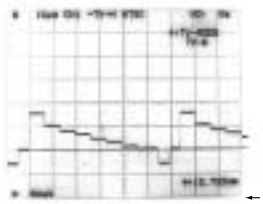

(8) CN3001-pin 6 (C) (Function : PLAY)
V: 500mV/div. H: 10µsec/div.

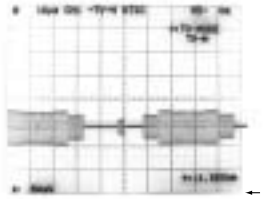

(9) CN3001-pin 8 (Component_Y) (Function : PLAY)
V: 500mV/div. H: 10µsec/div.

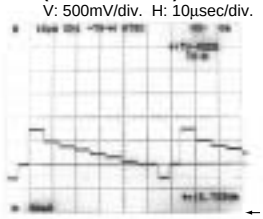

(10) CN3001-pin 10 (Component_Cb) (Function : PLAY)
V: 500mV/div. H: 10µsec/div.

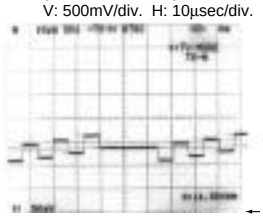

(11) CN3001-pin 12 (Component_Cr) (Function : PLAY)
V: 500mV/div. H: 10µsec/div.

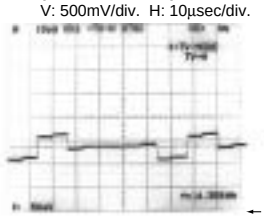

(12) Foot of C3511 + side (Y) (Function : PLAY)
V: 500mV/div. H: 10µsec/div.

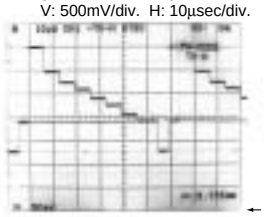

(13) Foot of C3515 + side (Component_Y) (Function : PLAY)
V: 500mV/div. H: 10µsec/div.

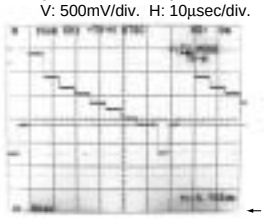

(14) Foot of C3516 + side (Component_Cb) (Function : PLAY)
V: 500mV/div. H: 10µsec/div.

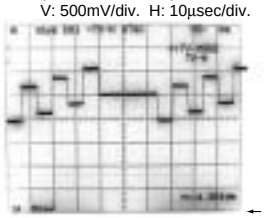

(15) Foot of C3517 + side (Component_Cr) (Function : PLAY)
V: 500mV/div. H: 10µsec/div.

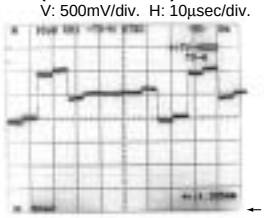

(16) Foot of C3507 + side (CVBS) (Function : PLAY)
V: 500mV/div. H: 10µsec/div.

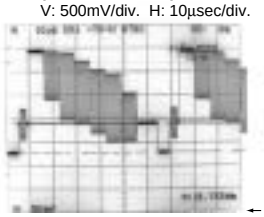

(17) Rear Jack Cout (C) (Function : PLAY)
V: 500mV/div. H: 10µsec/div.

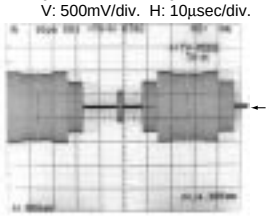

(Not terminated)

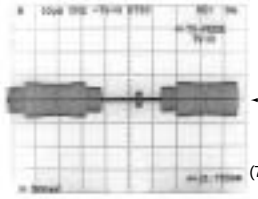

(75Ω terminated)

(18) CN3001-pin 28 (Audio Lch) (Function : L1)
V: 500mV/div. H: 200µsec/div.

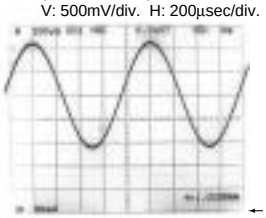

(19) CN3001-pin 16 (Audio Lch) (Function : PLAY)
V: 2V/div. H: 200µsec/div.

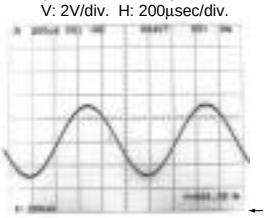

(20) Foot of C3552 + side (Audio Lch) (Function : PLAY)
V: 2V/div. H: 200µsec/div.

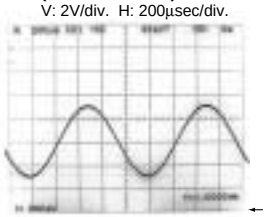

(21) L4 line (Audio Lch) (Function : 1ch)
V: 1V/div. H: 200µsec/div.

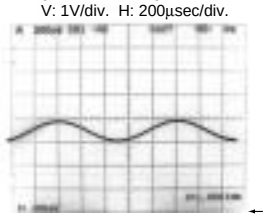

D MAIN ASSY

Measurement condition ;
No.3 to No.8, No.10 to No.13 : 75% Color-bar, A1 disc 2-20
No.15 ,No.16 : 75% Color-bar
No.9, No.14 : 1kHz, 2Vrms, A1 disc 2-1
No.17 : 1kHz, 2Vrms

1 **X4102 - pin 4 (ADMCLKI)**
V: 1V/div. H: 20nsec/div.
(Function : P.ON)

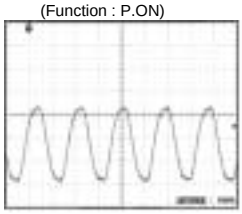

2 **R4205 (VMCLK)**
V: 1V/div. H: 20nsec/div.
(Function : P. ON)

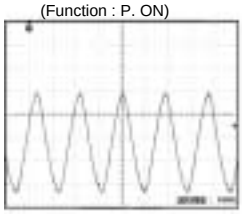

3 **Q2103 - B (Y)**
V: 500mV/div. H: 10µsec/div.
(Function : PLAY)

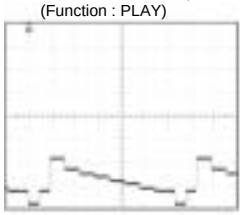

4 **Q2102 - B (C)**
V: 500mV/div. H: 10µsec/div.
(Function : PLAY)

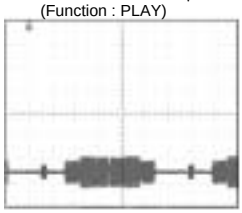

5 **Q2104 - B (Cb)**
V: 500mV/div. H: 10µsec/div.
(Function : PLAY)

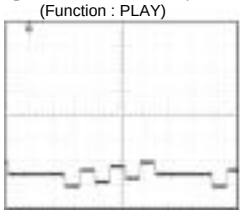

6 **Q2105 - B (Cr)**
V: 500mV/div. H: 10µsec/div.
(Function : PLAY)

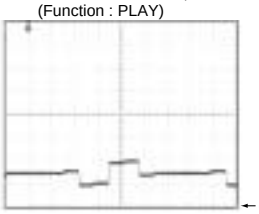

7 **Q2101 - B (Y)**
V: 500mV/div. H: 10µsec/div.
(Function : PLAY)

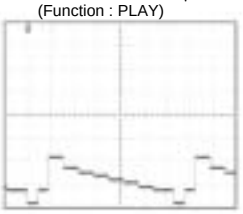

8 **CN2001-pin 10 (Cb Out)**
V: 500mV/div. H: 10µsec/div.
(Function : PLAY)

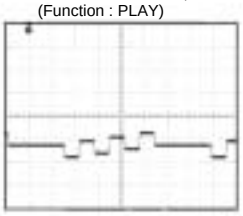

9 **CN2001-pin 16 (Lch Out)**
V: 2V/div. H: 200µsec/div.
(Function : PLAY)

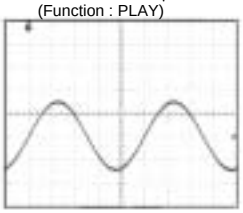

10 **CN2001-pin 12 (Cr Out)**
V: 500mV/div. H: 10µsec/div.
(Function : PLAY)

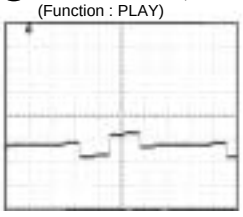

11 **CN2001-pin 4 (Y Out)**
V: 500mV/div. H: 10µsec/div.
(Function : PLAY)

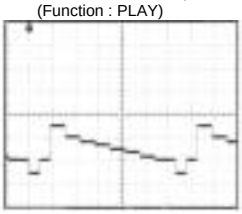

12 **CN2001-pin 6 (C Out)**
V: 500mV/div. H: 10µsec/div.
(Function : PLAY)

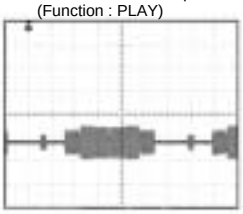

13 **CN2001-pin 8 (Y Out)**
V: 500mV/div. H: 10µsec/div.
(Function : PLAY)

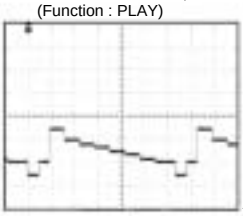

14 **CN3001-pin 8 (PCMAIN)**
V: 1V/div. H: 400nsec/div.
(Function : PLAY)

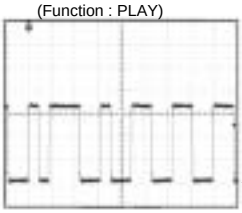

15 **CN2001-pin 24 (SEL Y/V)**
V: 500mV/div. H: 10µsec/div.
(Function : L1)

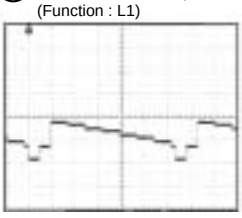

16 **CN2001-pin 26 (SEL C)**
V: 500mV/div. H: 10µsec/div.
(Function : L1)

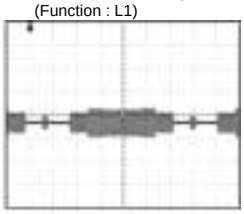

17 **CN2001-pin 28 (SEL L)**
V: 500mV/div. H: 200µsec/div.
(Function : L1)

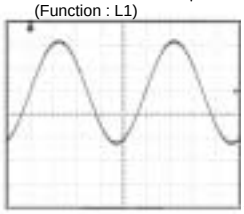

18 **IC3402-pin 7 (27MCLK)**
V: 1V/div. H: 20nsec/div.
(Function : P.ON)

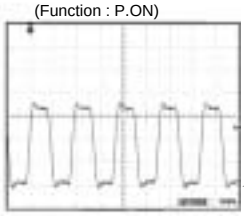

4. PCB CONNECTION DIAGRAM
4.1 ATAB ASSY

NOTE FOR PCB DIAGRAMS :

1. Part numbers in PCB diagrams match those in the schematic diagrams.
2. A comparison between the main parts of PCB and schematic diagrams is shown below.

Symbol In PCB Diagrams	Symbol In Schematic Diagrams	Part Name
B C E	B C E B C E	Transistor
B C E	B C E B C E	Transistor with resistor
D G S	D G S D G S	Field effect transistor
		Resistor array
		3-terminal regulator

3. The parts mounted on this PCB include all necessary parts for several destinations.
   For further information for respective destinations, be sure to check with the schematic diagram.
4. View point of PCB diagrams.

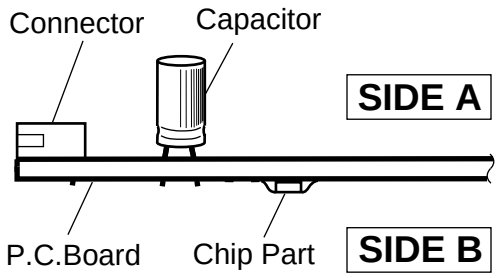

SIDE A

SIDE B

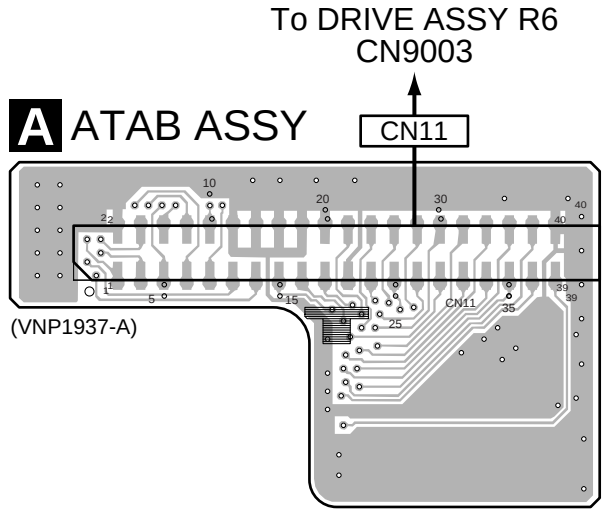

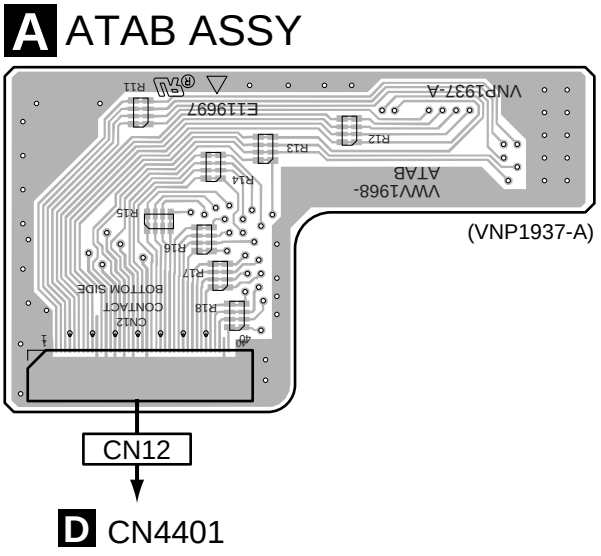

A

A

4.2 TUMJ, FRJB and DVJB ASSYS

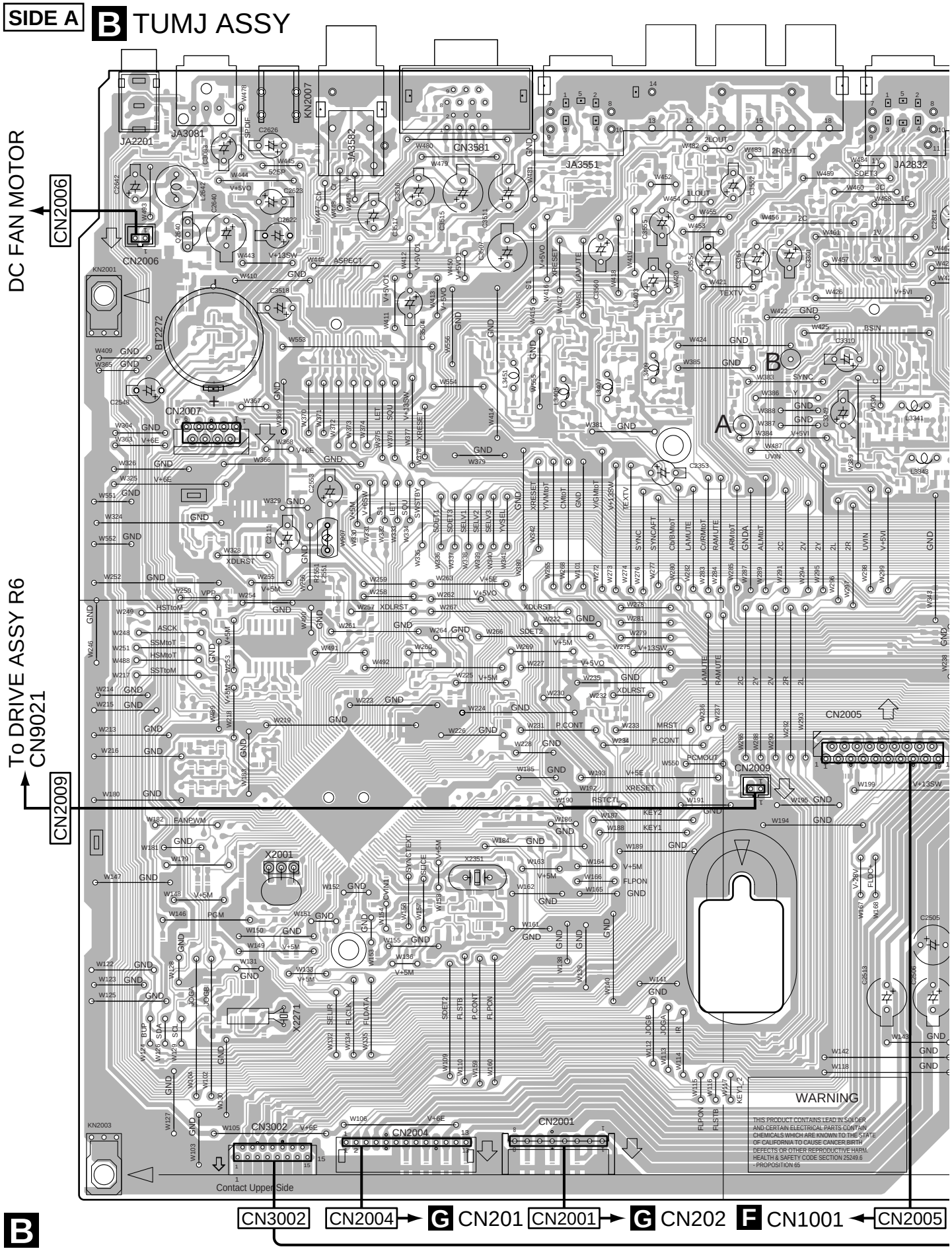

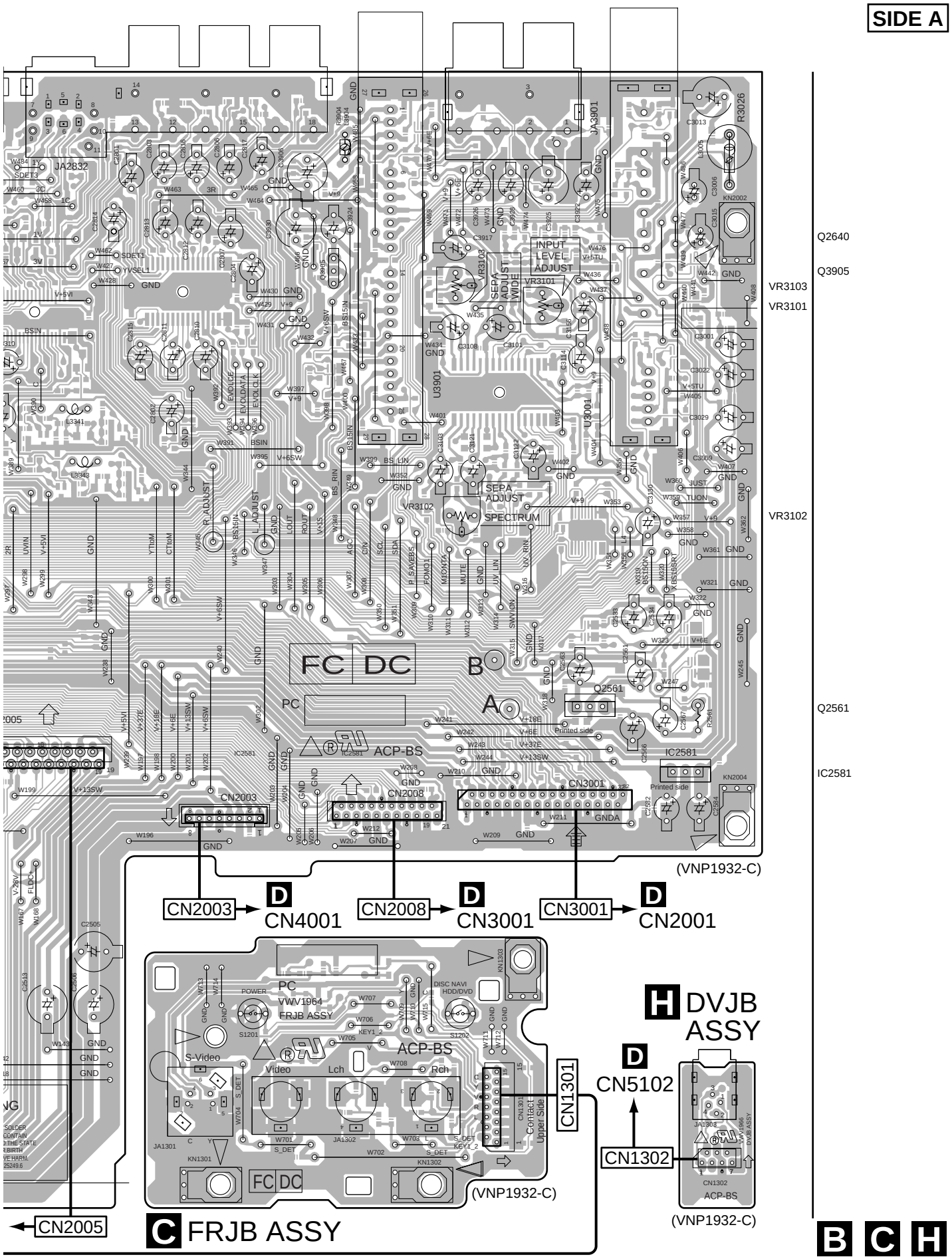
SIDE A
Q2640
Q3905
VR3103
VR3101
VR3102
Q2561
IC2581
(VNP1932-C)
CN2003
D
CN4001
CN2008
D
CN3001
CN3001
D
CN2001
H DVJB ASSY
D
CN5102
CN1302
CN1301
(VNP1932-C)
(VNP1932-C)
CN2005
C FRJB ASSY
B C H

SIDE B

B TUMJ ASSY

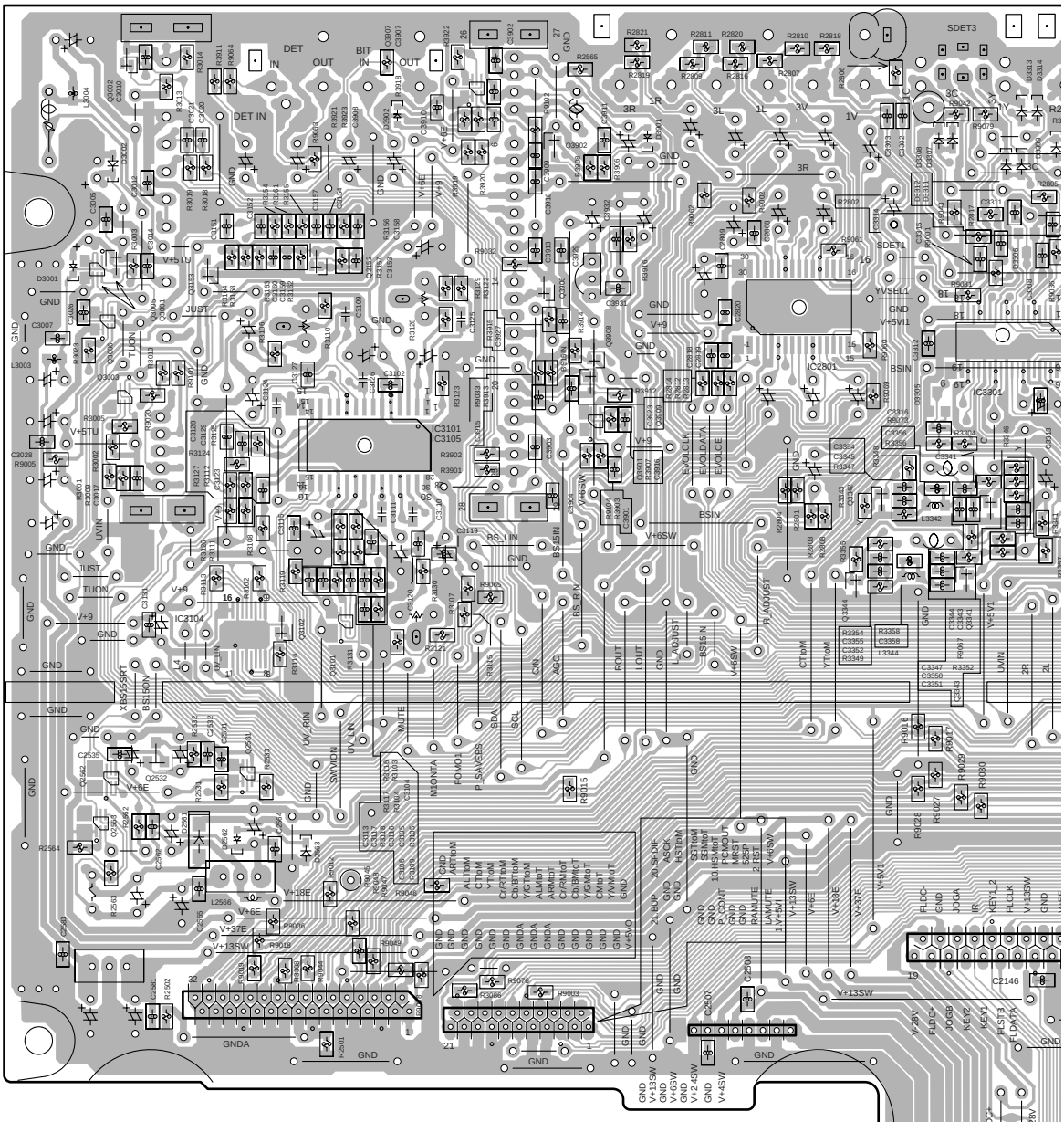

Q3002
Q3562 IC3081
Q3556
Q3554
Q3902 Q2621
Q3563
Q3560
Q3005
Q3001 Q3561 Q3551
Q3152 Q3559
Q3153
Q3098 Q3363 Q2641
Q3096
IC2801
Q3006
Q3410 IC3501
IC3301 Q3362
Q3406 IC2541
Q3003
Q3452
IC3101
IC3105 Q3453
Q3301 Q3409
Q3407
Q3405
Q3342
Q3341
IC2551
Q3344 Q3341
IC3104
Q3102 Q3101
IC2521
IC2251
Q2532
Q2562 Q2531 Q2151
Q2201
IC2003
Q2563
Q2564
Q2202
Q2204
Q2203 Q2271
IC2001
IC2351
Q2351
IC2271

H DVJB ASSY

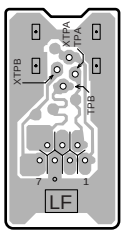

(VNP1932-C)

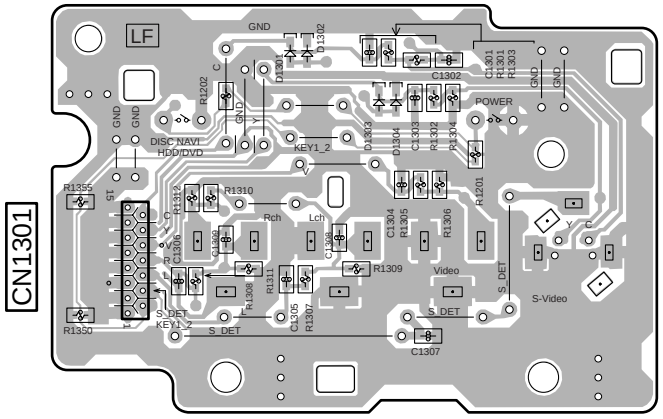

C FRJB ASSY

(VNP1932-C)

CN2005

SIDE B

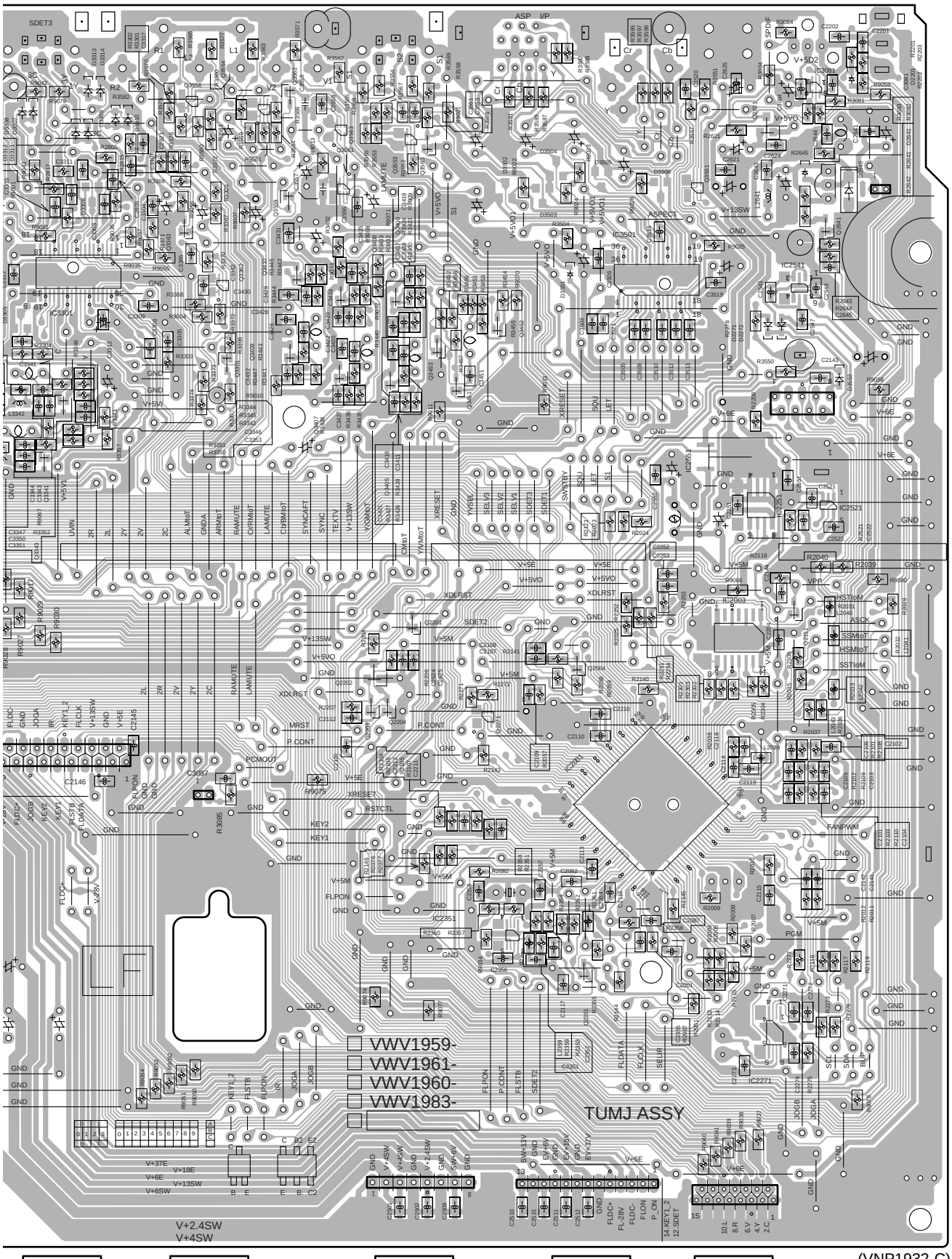
CN2006
VWV1959-
VWV1961-
VWV1960-
VWV1983-
TUMJ ASSY
(VNP1932-C)
CN2005
CN2009
CN2001
CN2004
CN3002

4.3 MAIN and MHLP ASYS

SIDE A

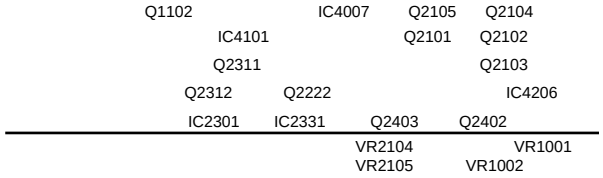

D MAIN ASSY

CN5102

CN4702

CN4301

CN1901

E MHLP ASSY

SIDE B

CN2

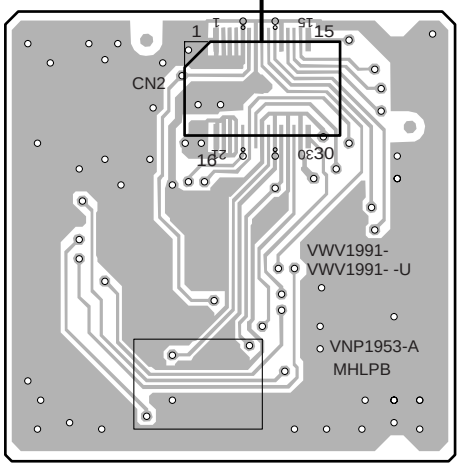

(VNP1953-A)

SIDE A

IC1

CN1

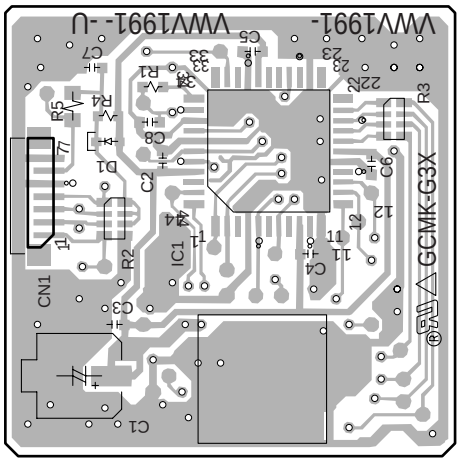

(VNP1953-A)

E MHLP ASSY

D **E**

B

SIDE A

)5 Q2104 IC5101 IC3301 IC5202
1 Q2102 IC3403 IC4004 IC5204
Q2103 Q3202 IC3402
IC4206 IC4205 IC3101 Q3201 IC4005
Q2402 IC4207 IC3001 IC4003 Q2001 IC4008
VR1001
VR1002 VC4201

This PCB is six layer structure.

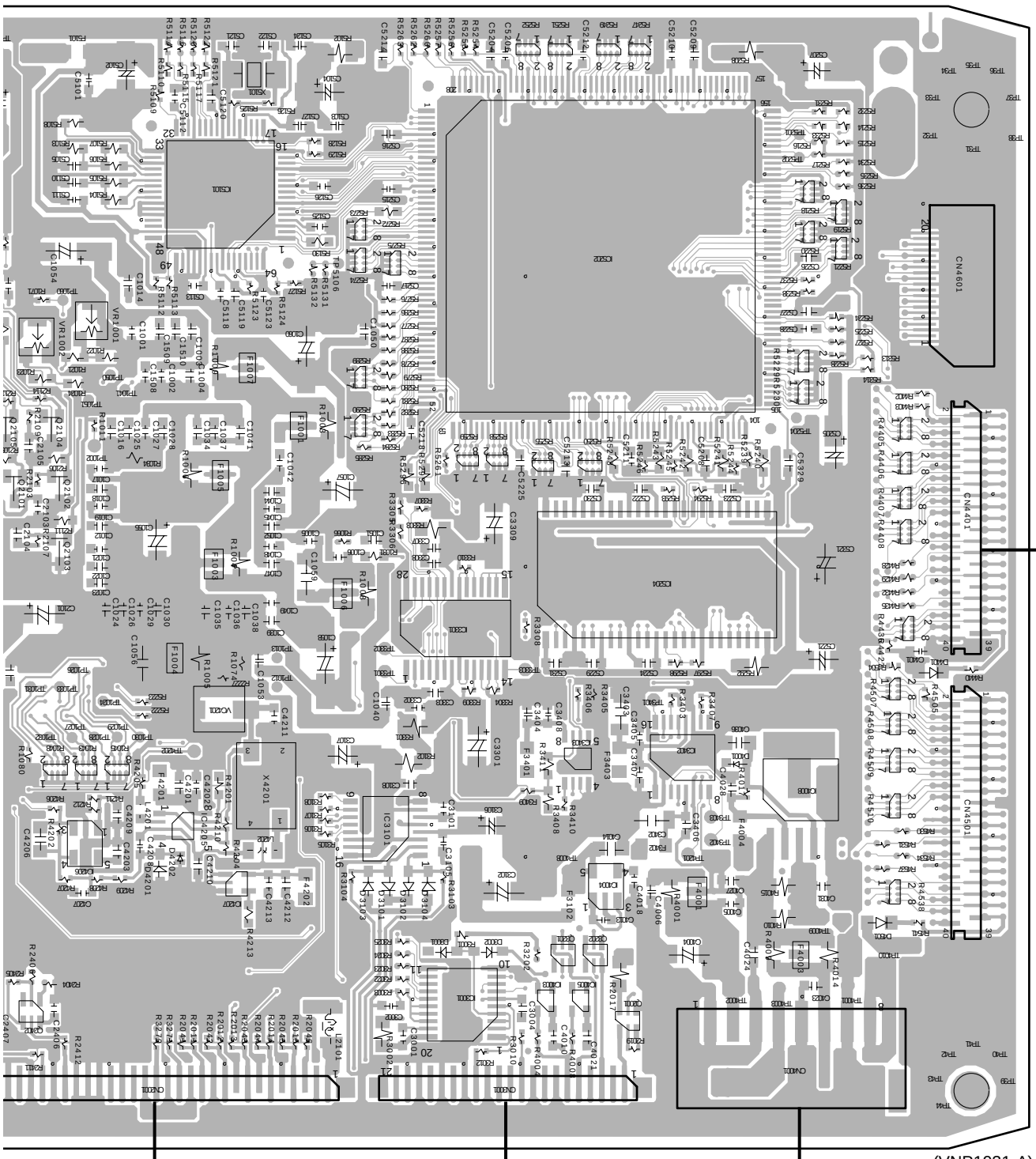

D

SIDE B

IC5203 IC1301

IC5301 IC5341 IC1421

IC5321 IC5002 IC1401 IC3201 IC1001

IC4006 IC4001 IC4002 IC3002 IC3251 IC1201

D MAIN ASSY

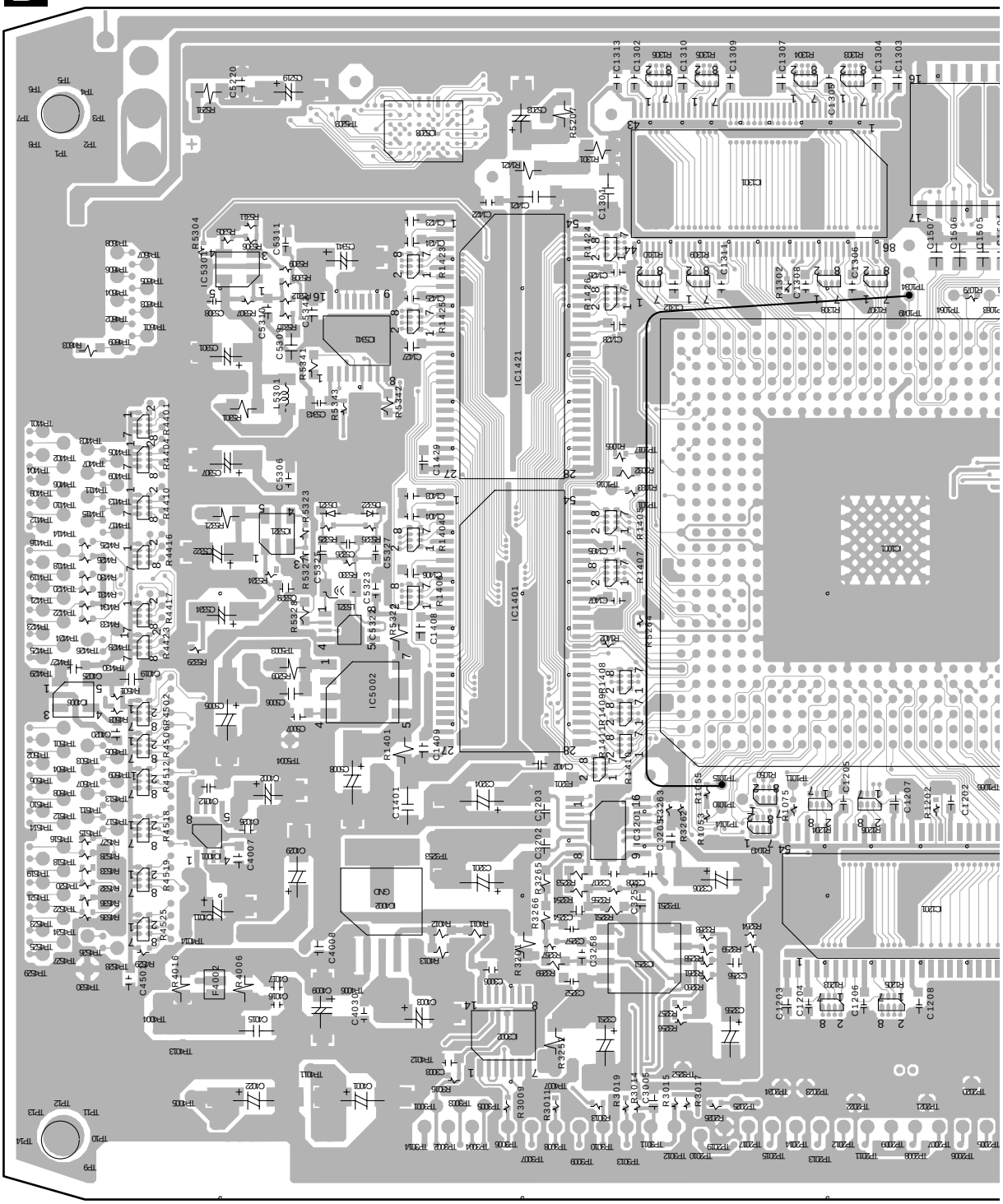

SIDE B

IC1103 Q1101 IC1102

Q2202 Q2201 IC1101

IC1001 Q2203

IC1201 Q2204 Q2302 Q2301

This PCB is six layer structure.

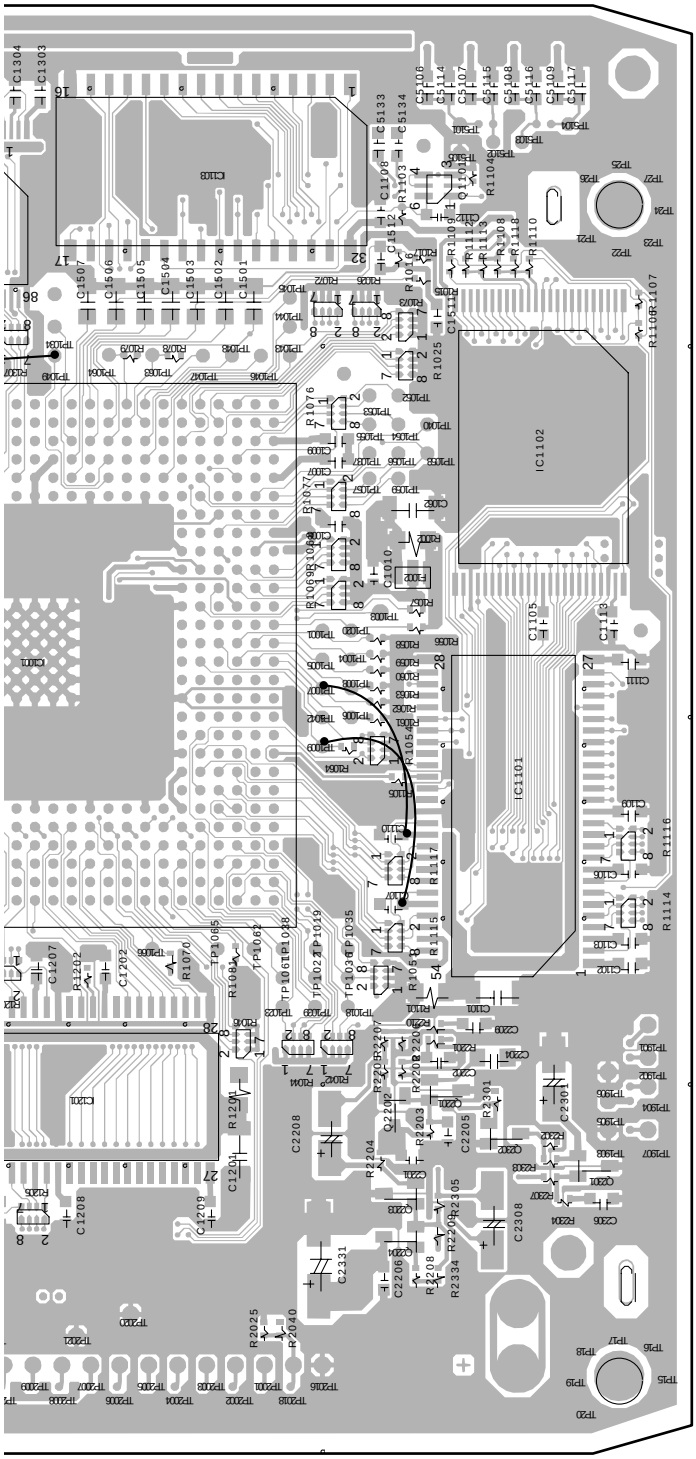

(VNP1931-A)

4.4 POWER SUPPLY UNIT

SIDE A

G POWER SUPPLY UNIT

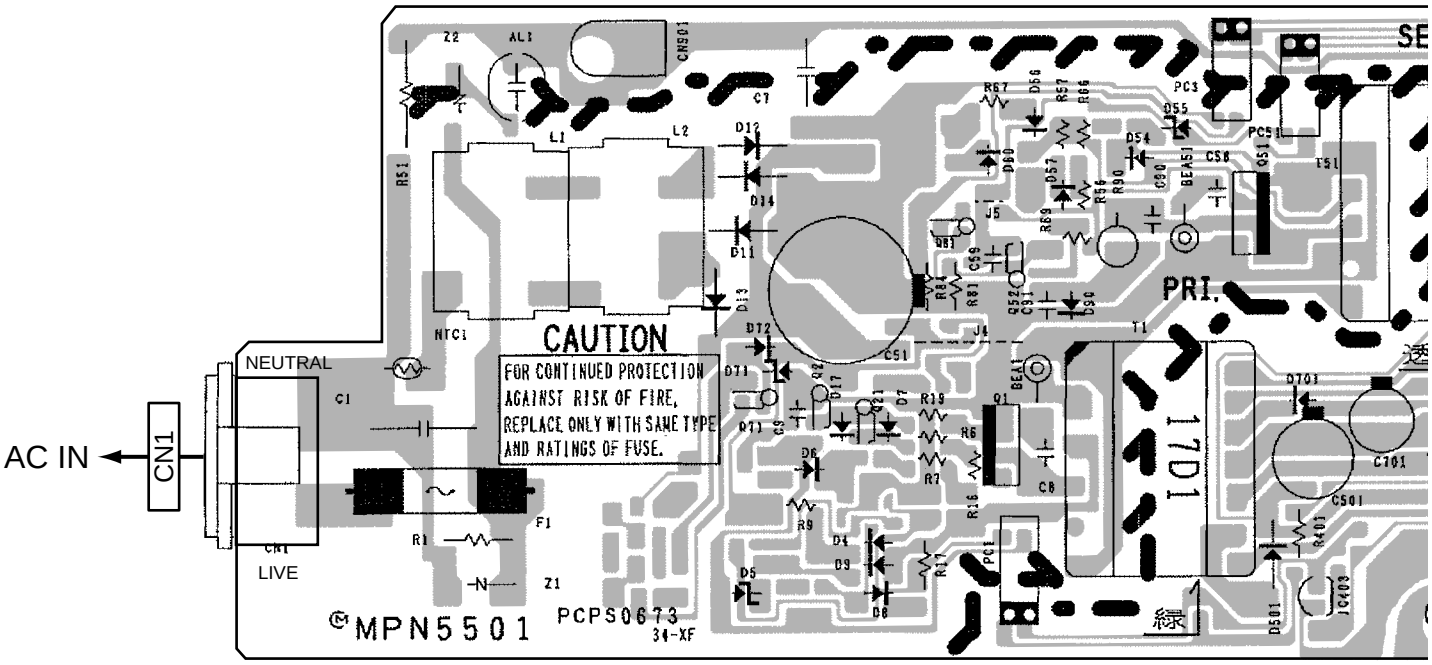

Q71 Q2 Q81 Q52 Q51
Q21 Q1 IC403

G

SIDE A

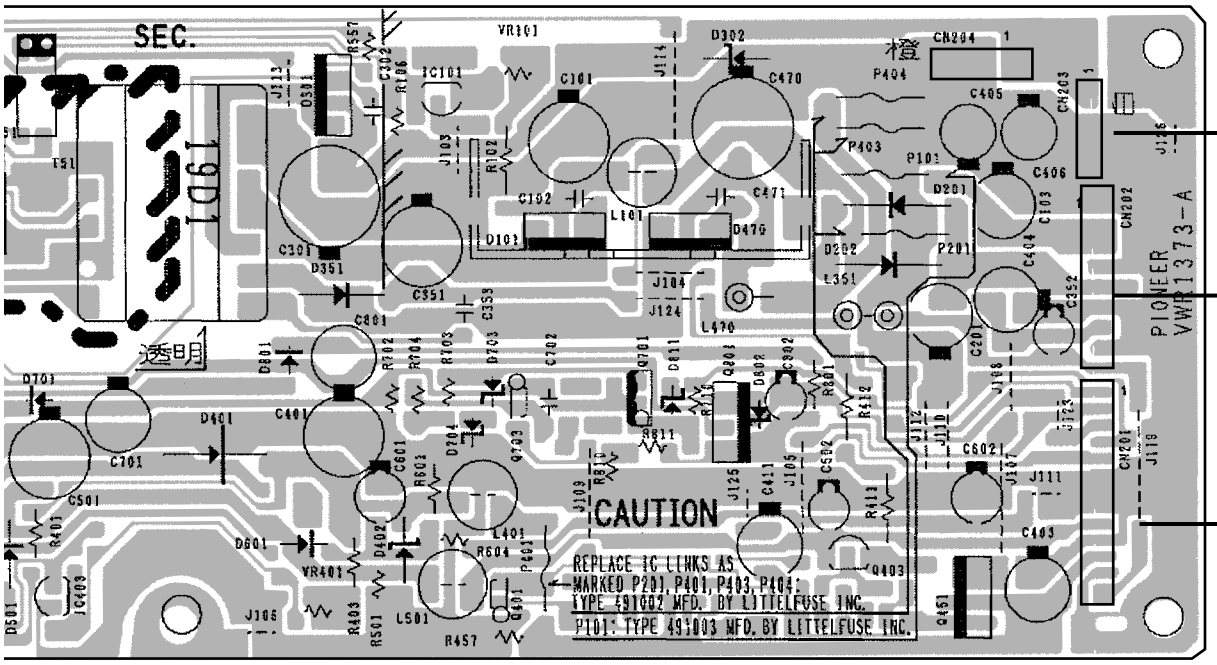

VR401 VR101

1 IC101 Q703 Q701 Q801 Q403

IC403

4.5 FLKY and LEDB ASSYS

SIDE A **SIDE A**

B CN2005

CN1001

F FLKY ASSY

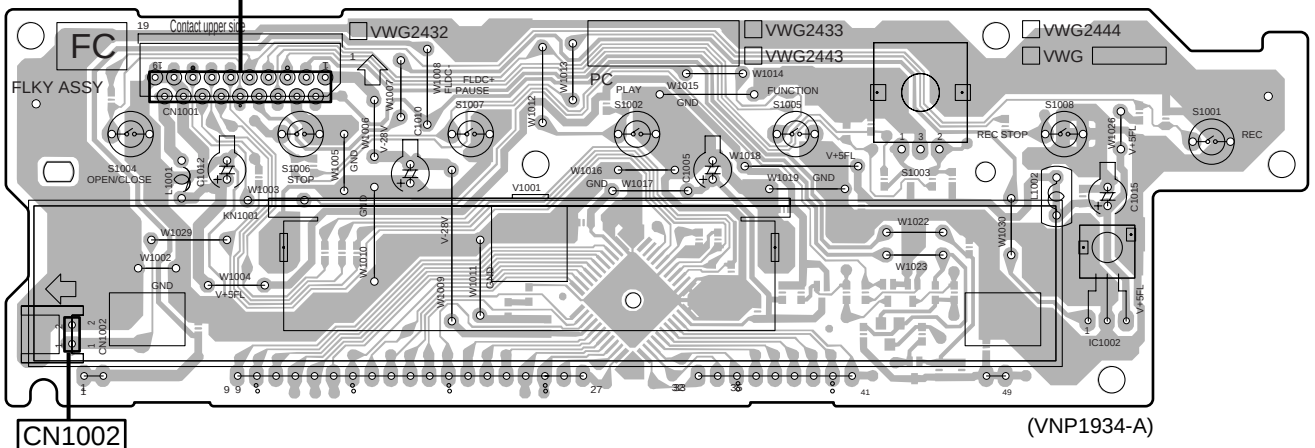

(VNP1934-A)

CN1002

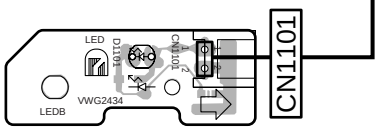

CN1101

(VNP1934-A)

I LEDB ASSY

SIDE B **SIDE B**

I LEDB ASSY

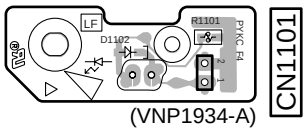

(VNP1934-A)

CN1002

F FLKY ASSY

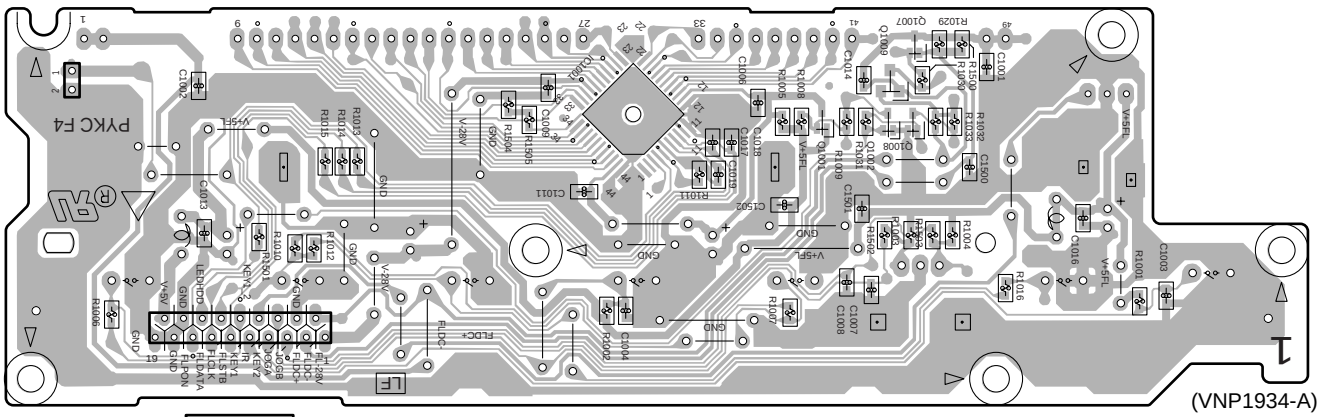

(VNP1934-A)

IC1001

Q1009 Q1007
Q1001 Q1002 Q1008

F **I** **F** **I**

5. PCB PARTS LIST

NOTES:
- *Parts marked by "NSP" are generally unavailable because they are not in our Master Spare Parts List.*
- *The ⚠ mark found on some component parts indicates the importance of the safety factor of the part. Therefore, when replacing, be sure to use parts of identical designation.*
- *When ordering resistors, first convert resistance values into code form as shown in the following examples.*

Ex.1 When there are 2 effective digits (any digit apart from 0), such as 560 ohm and 47k ohm (tolerance is shown by J=5%, and K=10%).

560 Ω	→	*56 x 10¹* →	*561*	*RD1/4PU 5 6 1 J*
47k Ω	→	*47 x 10³* →	*473*	*RD1/4PU 4 7 3 J*
0.5 Ω	→	*R50*		*RN2H R 5 0 K*
1 Ω	→	*1R0*		*RS1P 1 R 0 K*

Ex.2 When there are 3 effective digits (such as in high precision metal film resistors).

5.62k Ω	→	*562 x 10¹* →	*5621*	*RN1/4PC 5 6 2 1 F*

LIST OF ASSEMBLIES

Mark	No.	Description	Part No.
	1	ATAB ASSY	VWV1968
	1	TUJB ASSY	VWM2203
	2	TUMJ ASSY	VWV1960
	2	FRJB ASSY	VWV1964
	2	DVJB ASSY	VWV1966
	1	MAIN ASSY	VWV1955
	2	MHLP ASSY	VWV1991
	1	FLKB ASSY	VWM2213
	2	FLKY ASSY	VWG2444
	2	LEDB ASSY	VWG2434
⚠	1	POWER SUPPLY UNIT	VWR1373

A ATAB ASSY

OTHERS

Mark	No.	Description	Part No.
	CN12	CONECTOR	CKS4052
	CN11	40P ATA CONECTOR	VKN1805

B TUMJ ASSY

SEMICONDUCTORS

Mark	No.	Description	Part No.
	IC2551		BA05FP
	IC2251		BR24L32F-W
	IC3105		CXA2064M
	IC3301		LA73030
	IC3501		LA73054
	IC2801		LC75342M
	IC2581		NJM78M09FA
	IC2001		PD5942A8
	IC2541		PQ1K333M2ZP
	IC2521		PST3245
	IC2271		RS5C372A
	IC2003		TC74HCT7007AF
	IC2351		TC7WU04FU
	Q3002, Q3301, Q3342, Q3344, Q3363		2SA1576A
	Q3406, Q3408, Q3410, Q3452		2SA1576A
	Q2640		2SB1238X
	Q2532, Q2621		2SC2411K
	Q2203, Q2351, Q2641, Q3001, Q3453		2SC4081
	Q2202		2SD2114K
	Q2151, Q2201, Q3559, Q3562		DTA124EUA
	Q2204, Q3451		DTC124EUA
	Q3362		HN1B04FU
	Q3003, Q3101		HN1C01FU
	Q3554, Q3556		HN1C03FU
	Q2271		RN1901
	Q3005, Q3551, Q3561, Q3563		RN4903
	Q2531, Q3006		UMF21N
	D2640		1SR154-400
	D2271		1SS352
	D2201, D3001, D3551, D3552		1SS355
	D2272		RB501V-40
	D3002		UDZS33B
	D3307-D3314		UDZS5.6B

COILS AND FILTERS

Mark	No.	Description	Part No.
	L3405, L3407, L3409		LAU100J
	L3341, L3343		LAU180J
	L3451		LAU2R2J
	L2641		LCYA100J2520
	L3342, L3344		LCYA120J2520
	L2642	INDUCTOR	LTA102J
	L2023-L2025, L2039-L2043		VTL1081
	L2359, L3018, L3019	CHIP BEAD	VTL1081
	L3003, L3004	CHIP BEAD	VTL1096
	L3005	RADIAL INDUCTOR	VTL1165

CAPACITORS

Mark	No.	Description	Part No.
	C2273		CCSRCH4R0C50
	C2118, C2119, C2143, C2144, C2146		CCSRCH101J50
	C2818-C2820, C3362, C3365		CCSRCH101J50
	C2141, C2142		CCSRCH102J50
	C3356, C3358, C3416, C3422, C3428		CCSRCH150J50
	C3345, C3352		CCSRCH180J50
	C2645		CCSRCH221J50
	C2357, C2358, C3343, C3350, C3417		CCSRCH270J50
	C3423, C3429		CCSRCH270J50
	C2101, C2105, C2106, C2201		CCSRCH470J50
	C2354		CCSRCH561J50
	C3451		CCSRCH680J50
	C3106, C3117		CCSRCH681J50
	C3341, C3347		CCSRCH7R0D50
	C3344, C3351		CCSRCH820J50
	C2353, C2801-C2803, C2806		CEAT100M50
	C2810-C2817, C3001, C3006, C3114		CEAT100M50
	C3156, C3364		CEAT100M50
	C2111, C2533, C2534, C2548, C2553		CEAT101M10
	C2622, C2623, C2626, C3029, C3083		CEAT101M10

Mark	No.	Description	Part No.
	C3301, C3310, C3349, C3403, C3504		CEAT101M10
	C3518		CEAT101M10
	C2505, C2506, C2513, C2582, C2584		CEAT101M16
	C2642, C2804, C2807, C3101, C3555		CEAT101M16
	C3013, C3507, C3511, C3515		CEAT102M6R3
	C3560		CEAT221M6R3
	C3552, C3554		CEAT470M16
	C2640		CEAT471M16
	C3516, C3517		CEAT471M6R3
	C3108		CEAT4R7M50
	C2104, C2355, C2512, C2805, C2821		CKSRYB103K50
	C3105, C3116, C3317		CKSRYB103K50
	C2102, C2103, C3302, C3303		CKSRYB104K16
	C3305-C3309, C3311, C3314-C3316		CKSRYB104K16
	C3505, C3508, C3510, C3512, C3513		CKSRYB104K16
	C3123, C3127		CKSRYB105K10
	C3128		CKSRYB123K50
	C3012		CKSRYB222K50
	C3119		CKSRYB272K50
	C3104, C3115		CKSRYB472K50
	C3120		CKSRYB473K25
	C3129		CKSRYB562K50
	C2112, C2202, C2204, C2251, C2274		CKSRYF104Z25
	C2351, C2352, C2356, C2501, C2502		CKSRYF104Z25
	C2507-C2511, C2515, C2521, C2522		CKSRYF104Z25
	C2525, C2531, C2532, C2535, C2543		CKSRYF104Z25
	C2546, C2547, C2551, C2552, C2581		CKSRYF104Z25
	C2583, C2621, C2624, C2625, C2641		CKSRYF104Z25
	C2643, C2808, C2809, C3017, C3084		CKSRYF104Z25
	C3102, C3113, C3304, C3312, C3313		CKSRYF104Z25
	C3346, C3353, C3419, C3425, C3431		CKSRYF104Z25
	C3503, C3506, C3514, C3519-C3521		CKSRYF104Z25
	C3551, C3553		CKSRYF104Z25
	C2110, C2113-C2117, C2145, C2210		CKSRYF105Z10
	C3109-C3111, C3124-C3126 (4.7uF/6.3V)		VCG1039
	C3122 (10uF/50V)		VCH1224
	C3121 (3.3uF/50V)		VCH1225

RESISTORS

R2075		RD1/4PU102J
R2196, R2197		RD1/4PU681J
R3346, R3347, R3349, R3352, R3428		RS1/16S5600F
R3438, R3443		RS1/16S5600F
R3123		RS1/16S6802F
R2802, R2805, R2806, R2815		RS1/16S75R0F
R2817, R2818, R3303-R3305, R3451		RS1/16S75R0F
R3555, R3558, R3562, R3568, R3569		RS1/16S75R0F
R3571, R3595-R3597		RS1/16S75R0F
VR3101 (2.2k)		VCP1123
VR3102, VR3103 (4.7k)		VCP1154
Other Resistors		RS1/16S###J

OTHERS

U3001	TV TUNER MODULE	VXF1041
X2271 (32kHz)		VSS1143
X2351 (4.433619MHz)		VSS1176
X2001 (10MHz)		VSS1188
CN2006, CN2009	KR CONNECTOR	B2B-PH-K
CN2003	KR CONNECTOR	B8B-PH-K
J3001	BORAD IN JUMPER WIRE	DB217NS2
CN2005	FFC CONNECTOR 19P	HLEM19S-1
CN2007	FFC CONNECTOR 9P	HLEM9S-1
JA3081	OPTICAL LINK OUT	JFJ1001
JA2201	REMOTE CONTROL JACK	RKN1004
CN2004	KR CONNECTOR	S13B-PH-K
CN2001	8P SIDE POST	S8B-EH
2001	PCB BINDER	VEF1040
BT2272	LITHIUM BATTERY (CR2032)	VEM1033
JA3582	3P PIN JACK	VKB1165
JA2832	JACK	VKB1183
JA3551	JACK	VKB1184
CN2008	21P FFC CONNECTOR	VKN1252
CN3001	32P FFC CONNECTOR	VKN1263
CN3002	15P FFC CONNECTOR	VKN1275
2007	SCREW PLATE	VNE1948
KN2001-KN2004	WRAPPING TERMINAL	VNF1084

C FRJB ASSY

SEMICONDUCTORS

D1301-D1304		UDZS5.6B

SWITCHES AND RELAYS

S1201, S1202		VSG1009

CAPACITORS

C1308, C1309		CCSRCH471J50

RESISTORS

Other Resistors		RS1/16S###J

OTHERS

JA1302	3P JACK	VKB1189
JA1301	Y/C CONNECTOR	VKB1190
CN1301	15P FFC CONNECTOR	VKN1275
KN1301-KN1303	WRAPPING TERMINAL	VNF1084

D MAIN ASSY

SEMICONDUCTORS

IC3301		AD1895AYRS
IC3101		AK5381VT
IC2301		BA7655AF
IC1103		CY62148VLL-70ZI
IC5204		K4S161622D-TC80
IC1101		K4S281632E-TC75
IC1401, IC1421		K4S561632D-TC75
IC1001		M65672WG-C
IC2331		MM1508XN
IC5002		MM1562FF
IC1301		MT48LC4M32B2TG-6
⚠ IC4001		NJM2370R12
⚠ IC4004, IC4006		NJM2872F05
⚠ IC4007		NJM2880U1-33
IC4206, IC5301, IC5321		NJU7013F
IC3201		PCM1742KE
⚠ IC4008		PQ012FZ01ZP
⚠ IC4002		PQ070XZ02ZP
IC4003		PST3428U
IC4005		PST3809U

Mark No.	Description	Part No.
	IC3402	SM8707KV
	IC4101	SN74AHC2G53HDCT
	IC3001	TC74LCX541FT
	IC3002	TC74VHC14FT
	IC5341	TC74VHC157FT
	IC3403, IC4205, IC5322	TC7WHU04FU
	IC3251	UPC4570G2
	IC5101	UPD72852AGB-8EU
	IC5202	UPD72893AGD-LML
	IC1102	VYW2116
	IC1201	W986416DH-6
	Q2101-Q2105, Q2201, Q2203, Q2301	2SA1576A
	Q2312	2SA1576A
	Q2202, Q2222	2SC4081
	Q2302, Q2311	DTC114EUA
	Q2402, Q2403	HN1B04FU
	Q1101	HN1K03FU
	Q3201, Q3202	RN1903
	Q1102	RN4982
	Q2001	UMF21N
	D3001, D3002, D3101-D3104	1SS355
	D5321	HVC359
	D5322	HVC362
	D4201	MA2ZV05
	D1111, D4001	RB521S-30

COILS AND FILTERS

	F3102, F3401-F3403, F4004, F4201	DTF1069
	F5101 CHIP BEAD	DTF1069
	L5301, L5321	LCYA100J2520
	L4202	LCYA1R2J2520
	F3201 CHIP SOLID INDUCTOR	VTF1096
	L5101, L5102 CHOKE COIL	VTH1043
	L2101 CHIP COIL	VTL1067
	L4201 CHIP BEAD	VTL1079
	L5103-L5106 CHIP BEAD	VTL1082

CAPACITORS

	C5311, C5329	CCSRCH100D50
	C3253, C3258	CCSRCH101J50
	C5105	CCSRCH271J50
	C5325, C5327	CCSRCH330J50
	C3207	CCSRCH331J50
	C4208	CCSRCH390J50
	C5131-C5138	CCSRCH4R0C50
	C5326	CCSRCH5R0C50
	C3254, C3257	CCSRCH681J50
	C5121, C5122	CCSRCH8R0D50
	C2208, C2317, C4002, C4009, C4011	CEVW100M16
	C4034, C5203, C5322	CEVW100M16
	C3251, C3255, C4001, C4004, C4029	CEVW101M16
	C2101, C2221, C2331, C2405	CEVW101M6R3
	C3201, C3204, C3206, C3301, C3309	CEVW101M6R3
	C2301, C5102	CEVW220M6R3
	C1054, C1055, C1057, C1058, C1061	CEVW221M4
	C4022, C5005	CEVW221M4
	C3106	CEVW2R2M50
	C5321	CEVW470M16
	C2308, C3102, C3107, C4003, C5205	CEVW470M6R3
	C5207, C5221, C5341	CEVW470M6R3
	C5301	CEVW4R7M35

Mark No.	Description	Part No.
	C2204, C2334, C4206, C5309	CKSQYB105K10
	C1901, C4014, C4019, C4033, C4036	CKSQYB225K10
	C5006	CKSQYB225K10
	C1501-C1507	CKSQYB475K6R3
	C1004, C1012, C1014, C1029, C1034	CKSRYB102K50
	C1040, C1044, C1049, C1051	CKSRYB102K50
	C1110-C1112, C1207, C1208, C1307	CKSRYB102K50
	C1311, C1313, C1407, C1408	CKSRYB102K50
	C1427, C1428, C3303, C3307, C3408	CKSRYB102K50
	C1003, C1027, C1037, C1052, C1109	CKSRYB103K50
	C1206, C1305, C1308, C1310, C1406	CKSRYB103K50
	C1425, C2305, C3003, C3004, C4018	CKSRYB103K50
	C4020, C4207, C5214, C5222, C5224	CKSRYB103K50
	C1508-C1510, C2225, C2311, C4104	CKSRYB104K16
	C5306	CKSRYB104K16
	C3001, C3006, C3205, C3256, C3308	CKSRYB105K10
	C4107, C4203, C4209, C5120, C5124	CKSRYB105K10
	C5213, C5216, C5218, C5225, C5227	CKSRYB105K10
	C5323, C5342	CKSRYB105K10
	C4103	CKSRYB223K50
	C5328	CKSRYB473K25
	C2202	CKSRYB563K16
	C1002, C1005, C1007-C1010, C1016	CKSRYF104Z25
	C1018, C1019, C1021-C1023	CKSRYF104Z25
	C1025, C1026, C1028, C1030, C1035	CKSRYF104Z25
	C1038, C1041, C1042, C1047, C1102	CKSRYF104Z25
	C1105, C1106, C1108, C1114, C1202	CKSRYF104Z25
	C1204, C1302, C1304, C1312, C1402	CKSRYF104Z25
	C1404, C1422, C1424, C2102-C2106	CKSRYF104Z25
	C2201, C2206, C2222, C2306, C2319	CKSRYF104Z25
	C2332, C2406, C2407	CKSRYF104Z25
	C3101, C3105, C3108, C3202, C3203	CKSRYF104Z25
	C3252, C3302, C4006-C4008, C4010	CKSRYF104Z25
	C4012, C4013, C4017, C4021	CKSRYF104Z25
	C4024-C4026, C4032, C4035, C4202	CKSRYF104Z25
	C5101, C5103, C5111-C5113	CKSRYF104Z25
	C5118, C5119, C5123, C5125-C5127	CKSRYF104Z25
	C5204, C5206, C5208-C5212, C5215	CKSRYF104Z25
	C5217, C5226, C5228-C5230, C5308	CKSRYF104Z25
	C5310, C5343	CKSRYF104Z25
	C1001, C1006, C1011, C1013, C1017	CKSRYF105Z10
	C1024, C1036, C1039, C1045, C1048	CKSRYF105Z10
	C1050, C1053, C1103, C1107, C1113	CKSRYF105Z10
	C1203, C1205, C1209, C1303, C1306	CKSRYF105Z10
	C1309, C1403, C1405, C1409, C1423	CKSRYF105Z10
	C1426, C1429, C2507, C3404-C3407	CKSRYF105Z10
	C4027, C4028, C4030, C4031, C4105	CKSRYF105Z10
	C4201, C4401, C4501, C5110, C5231	CKSRYF105Z10
	C1056, C1059, C1062, C1101, C1104	CKSYF106Z10
	C1201, C1301, C1401, C1421	CKSYF106Z10
	C3402, C3403, C4015	CKSYF106Z10
	C1060, C5008 (150uF/4V)	VCH1234
	VC4201 (10pF)	VCM1012

RESISTORS

	R1025, R1026, R1042-R1046	RAB4CQ103J
	R1048-R1051, R1054, R1068, R1069	RAB4CQ103J
	R1072, R1073, R5218-R5221	RAB4CQ103J
	R5229, R5230, R5247, R5249-R5252	RAB4CQ103J
	R5255, R5258, R5259, R5273-R5275	RAB4CQ103J

Mark	No.	Description	Part No.
		R5289, R5290	RAB4CQ103J
		R1408-R1411, R4302-R4306	RAB4CQ220J
		R4401, R4404, R4410, R4416, R4417	RAB4CQ223J
		R4423, R4502, R4506, R4512	RAB4CQ223J
		R4518, R4519, R4525	RAB4CQ223J
		R1114-R1117, R4405-R4408, R4436	RAB4CQ330J
		R4507-R4510, R4538	RAB4CQ330J
		R1303-R1310, R1404-R1407	RAB4CQ560J
		R1423-R1426	RAB4CQ560J
		R1203-R1206	RAB4CQ680J
		R5103	RN1/16SE5101D
		R5108	RN1/16SE9101D
		R1001-R1009, R1101, R1102, R1201	RS1/10S0R0J
		R1301, R1401, R1421, R2017	RS1/10S0R0J
		R3002, R3102, R3201, R3252	RS1/10S0R0J
		R3301, R3303, R4001, R4006, R4009	RS1/10S0R0J
		R4014, R4016, R4108, R4109, R5102	RS1/10S0R0J
		R5207-R5209, R5292, R5322	RS1/10S0R0J
		R5321	RS1/10S101J
		R4013	RS1/16S1001F
		R3254, R3266	RS1/16S1002F
		R3253, R3265	RS1/16S1201F
		R4011	RS1/16S1501F
		R4012	RS1/16S1800F
		R1021, R1023	RS1/16S2201F
		R3251, R3269	RS1/16S2202F
		R2105, R2106, R2111, R2112, R2115	RS1/16S3300F
		R5104-R5107	RS1/16S56R0D
		Other Resistors	RS1/16S###J

OTHERS

CN4001	PH CONNECTOR	S8B-PH-SM3
CN1901	7P FFC CONNECTOR	VKN1299
CN5102	7P FFC CONNECTOR	VKN1411
CN3001	21P FFC CONNECTOR	VKN1425
CN4301	29P FFC CONNECTOR	VKN1433
CN2001	32P FFC CONNECTOR	VKN1436
CN4401	40P FFC CONNECTOR	VKN1794
KN3	EARTH METAL FITTING	VNF1109
X4201 (27.000MHz)		VSS1146
X5101 (24.576MHz)		VSS1184
X4102 (27MHz) VCXO		VSS1195

E MHLP ASSY

SEMICONDUCTORS

IC1		PDY081A
D1		RB521S-30

CAPACITORS

C1		CEVW101M6R3
C2-C6		CKSRYF104Z25
C7		CKSRYF105Z10

RESISTORS

R3		RAB4C0R0J
R2		RAB4C102J
R1		RS1/16S0R0J
Other Resistors		RS1/10S###J

OTHERS

CN1	7P FFC CONNECTOR	VKN1411
CN2	B TO B CONNECTOR 30P	VKN1571

F FLKY ASSY

SEMICONDUCTORS

IC1001		PT6315

COILS AND FILTERS

L1001		LAU220J

SWITCHES AND RELAYS

S1001, S1002, S1004-S1008		VSG1009
S1003		VSX1004

CAPACITORS

C1012		CEJQ101M6R3
C1010		CEJQ220M35
C1015		CEJQ470M16
C1001-C1004, C1006-C1009, C1011		CKSRYB103K50
C1013, C1016		CKSRYB103K50

RESISTORS

Other Resistors		RS1/16S###J

OTHERS

CN1001	19P FFC CONNECTOR	9607S-19F
IC1002	REMOTE RECEIVER UNIT	RPM7140-H4
V1001	FL TUBE	VAW1081
	RUBBER SPACER	VEB1357
1001	FL HOLDER	VNF1120

G POWER SUPPLY UNIT

OTHERS

⚠ P101	PROTECTOR(3A)	AEK7050
⚠ P201, P401, P403, P404	PROTECTOR(2A)	AEK7067

H DVJB ASSY

OTHERS

JA1303	DV-TERMINAL	VKB1186
CN1302	7P FFC CONNECTOR	VKN1238

I LEDB ASSY

SEMICONDUCTORS

D1101		SLR-343BBT

RESISTORS

Other Resistors		RS1/16S###

6. ADJUSTMENT

6.1 TUMJ ASSY ADJUSTMENT

* It is not necessary to adjust the ASSY normaly when exchanging the ASSY. But the adjustment is necessary when exchanging the Tuner Module and IC3105 stereo decoder IC.

No.	Adjustment Name	Adj. Point	Measurement Point	Adjustment Value	Adjustment State
1	Stereo Decoder ATT adjustment (Input system adjustment)	VR3101	Audio ouput (L) (Rear panel)	465mVrms ± 23.25mV	Input a signal of Mono 1kHz/100% modulation to terrestrial tuner input. /through output.
2	Stereo Decoder Wideband adjustment (Input system adjustment)	VR3103	Audio ouputs (L/R) (Rear panel)	Best point of separation ≥30dB Note 1	Input a signal of Stereo 300Hz/30% modulation (NR-ON/L ch only) to terrestrial tuner input. Note 2
3	Stereo Decoder Spectral adjustment (Input system adjustment).	VR3102	Audio ouputs (L/R) (Rear panel)	Best point of separation ≥25dB Note 1	Input a signal of Stereo 3kHz/30% modulation (NR-ON) to terrestrial wave input. /through output Note 2

Note 1 : The values for channel separation is defined as those having passed through the following filters :
100Hz – 10kHz : +0/–0.5dB
15.75kHz – 100kHz : -40dB or more

Note 2 : The adjustment No.2 and No.3 should be repeated 2 times for good adjustment.
(Steps : No.1 → No.2 →No.3 →No.2 →No.3)

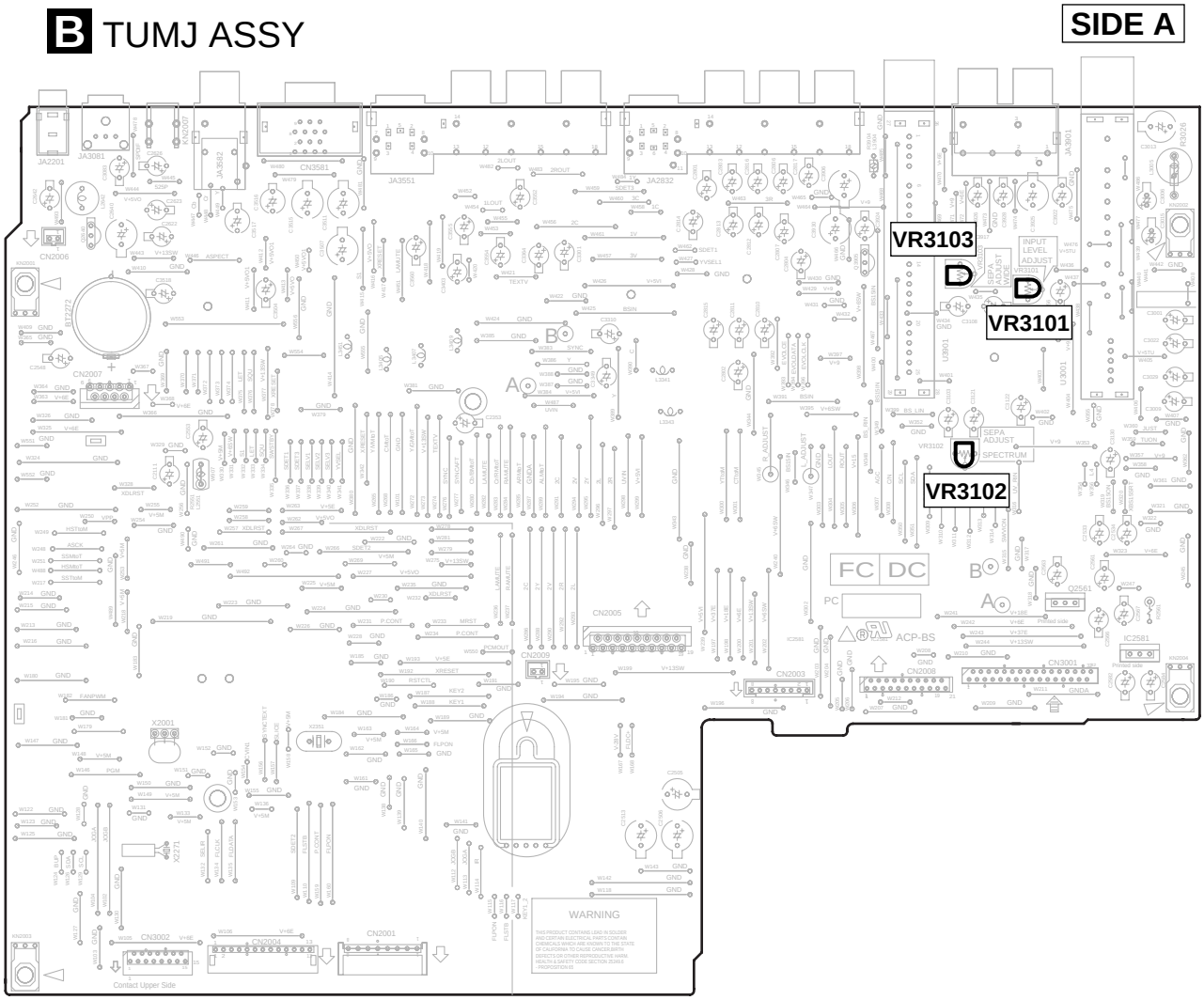

Fig.1 Adjustment Points (TUMJ ASSY)

6.2 MAIN ASSY ADJUSTMENT

* It is not necessary to adjust the ASSY normaly when exchanging the ASSY, but confirm the data.

No.	Adjustment Name	Adj. Point	Measurement Point	Adjustment Value	Adjustment State
1	Master clock free-running adjustment (Clock system adjustment)	VC4201	MAIN ASSY IC3402 Pin8 (XTO) (SM8707KV)	27.000000MHZ ± 130Hz	No signal input

D MAIN ASSY

SIDE A

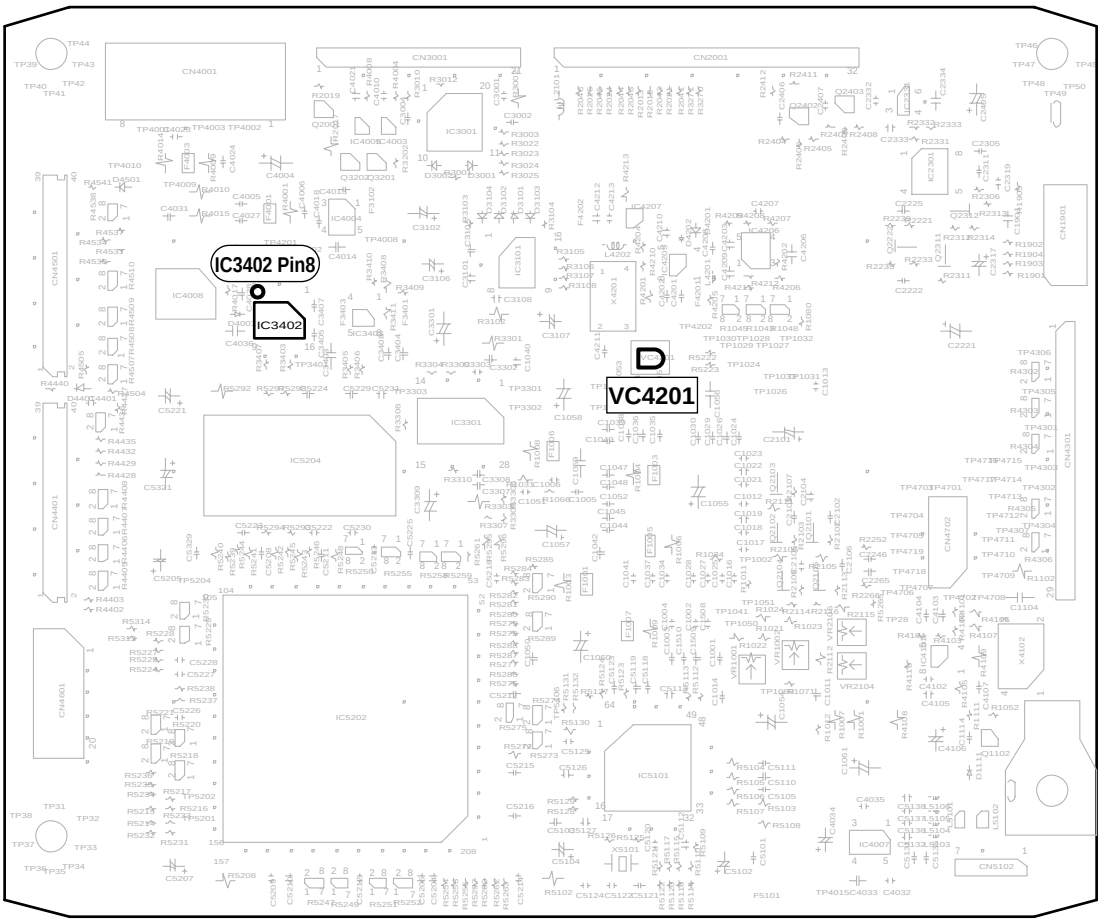

Fig.2 Adjustment Point (MAIN ASSY)

7. GENERAL INFORMATION

7.1 DIAGNOSIS

7.1.1 CPRM ID NUMBER AND DATA SETTING

A

Use DVD Recorder DATA DISC [GGV1134], Service Remote Control Unit [GGF1381] and Remote Control Unit of the model [VXX2887]

Entering the ID Number and ID Data for DVD Recorder

For the DVD recorder,it is necessary with the recoding/playback of DVD–RW disc to set an individual number (ID number) and ID data to each recorder. If the number and data are not set correctly with the following procedure, operations in the future may not be guaranteed. You will find the ID number to be set on the ID label on the rear panel.

B

Important: If no ID label is found on the rear panel, write down the specified ID number by checking it according to "How to confirm the ID number" shown below.

The Input is Necessary When:

- " CPRM ERR" is displayed on the FL display immediately after the power is turned on or in Stop mode.
- When the MAIN ASSY , DRIVE ASSY or the HDD is exchanged.

C

D

E

F

■ Input Flow of the ID No. and ID data when exchanging HDD, MAIN Assy or Drive Assy

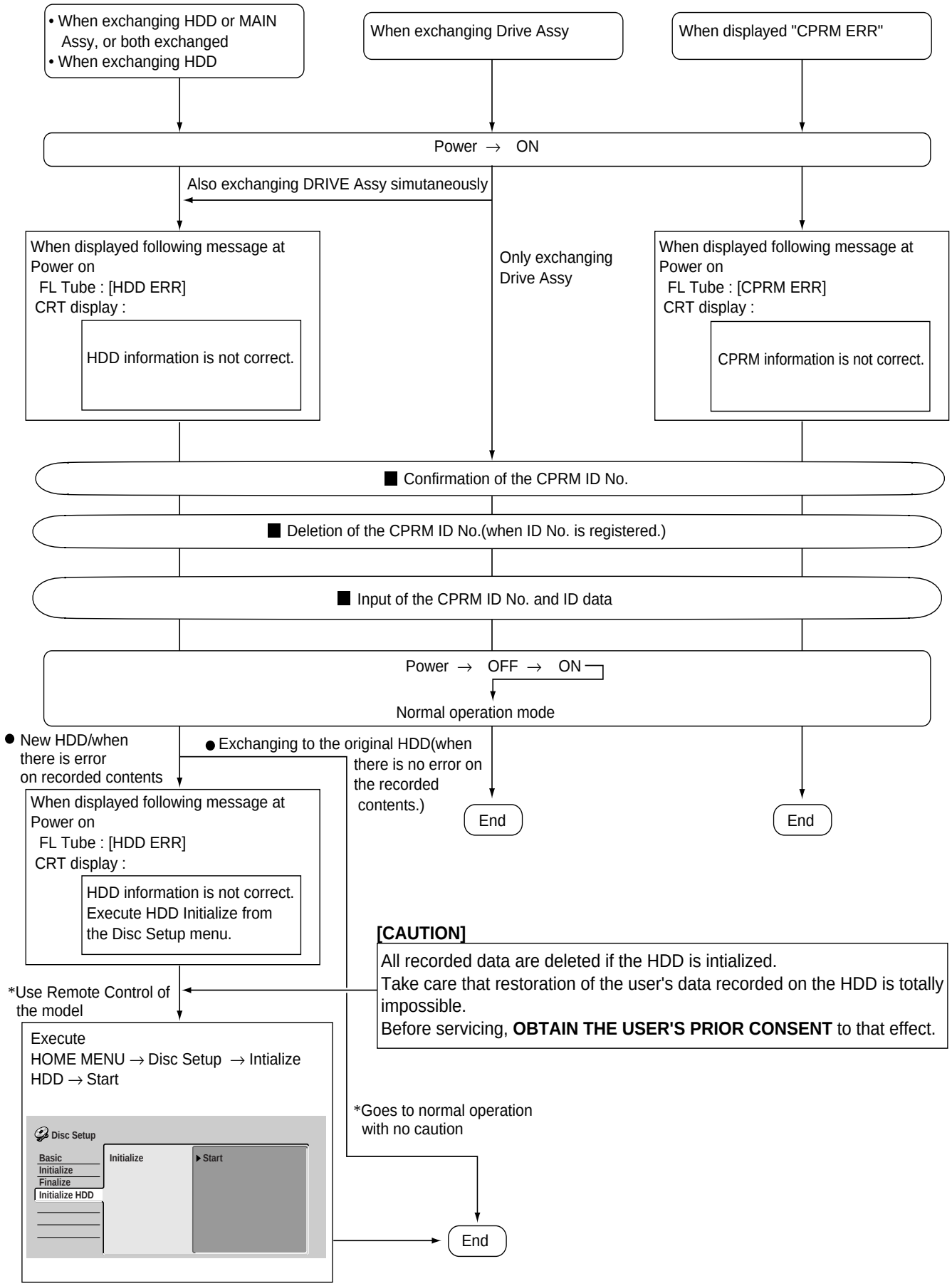

How to Input the ID Number and ID Data

Note:
Be sure to enter the ID number in Stop mode.
Use the service remote control (GGF1381) for operations. Only opening/closing of the tray are performed from the player.
The ID data disc is swept out automatically after the recorder has read the data from it.

① To enter the input mode, press ESC + STEREO sequentially in a status with no ID number set, such as after FLASH-ROM downloading.

② As number input is enabled when the unit enters the input mode, input the 9-digit ID number.
(The entered number is also displayed on the FL display.)

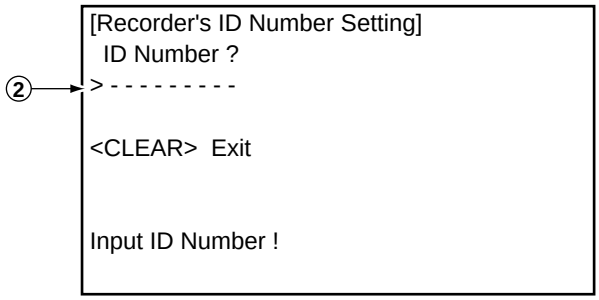

③ After inputting the number, press SEARCH to register the ID number.

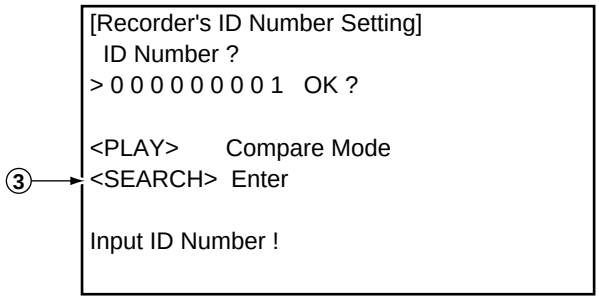

④ When the ID number has been registered, the unit enters the ID data input mode. (The FL display indicates "INSERT ID.")
In this condition, place the ID data disc on the tray and close the tray using the CLOSE key "■/⏏" on the player.

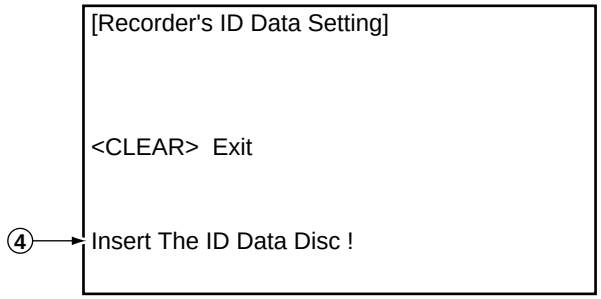

⑤ While the data are being read, the message shown in the figure at left is displayed on the screen.
(The FL display indicates "LOAD ID.")

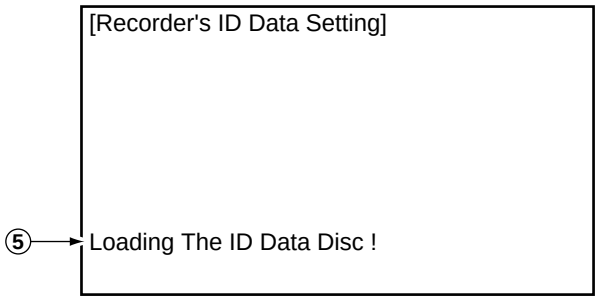

⑥ When the ID data have been read, the data are written to the FLASH-ROM.
(The FL display indicates "WRITE ID.")

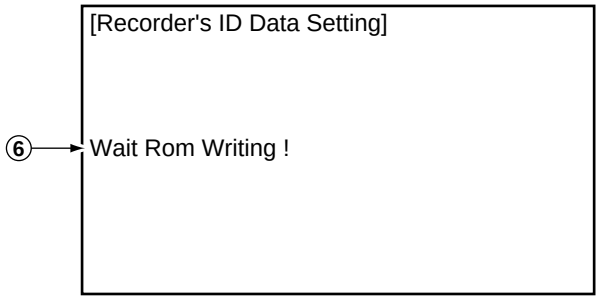

⑦ When the ID data have been written to the FLASH-ROM, the message "Rom Write OK" is displayed on the screen.
(The FL display indicates "ID DATA OK.")

⑧ After confirming this message, press CLEAR to exit the input mode.

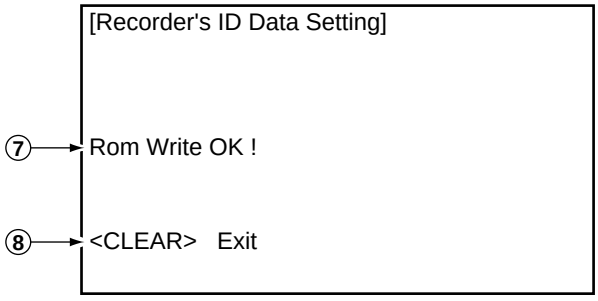

How to Confirm the ID Number

① Press ESC + STEREO sequentially with an ID number already set, and the unit enters the ID number confirmation mode.

② The set ID number is displayed on the screen (and on the FL display), permitting you to confirm it.

③ To exit this mode, press CLEAR.

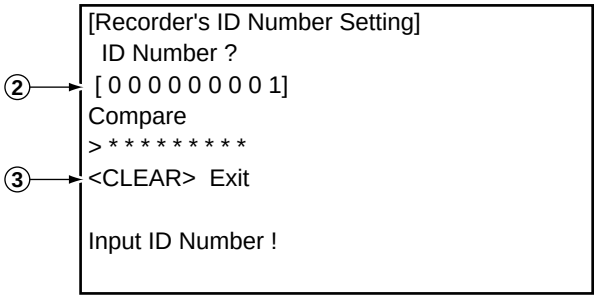

How to Clear the ID Number

① Press ESC + STEREO sequentially with an ID number already set, and the unit enters the ID number confirmation mode.

② Input the same number as the ID number you have set.

③ After inputting the number, press STOP.
Only when the entered number matches the set ID number, the ID number is cleared and the unit exits this mode.
If the numbers do not match, you must return to step 2.
(STOP is not accepted until 9 digits are entered.)

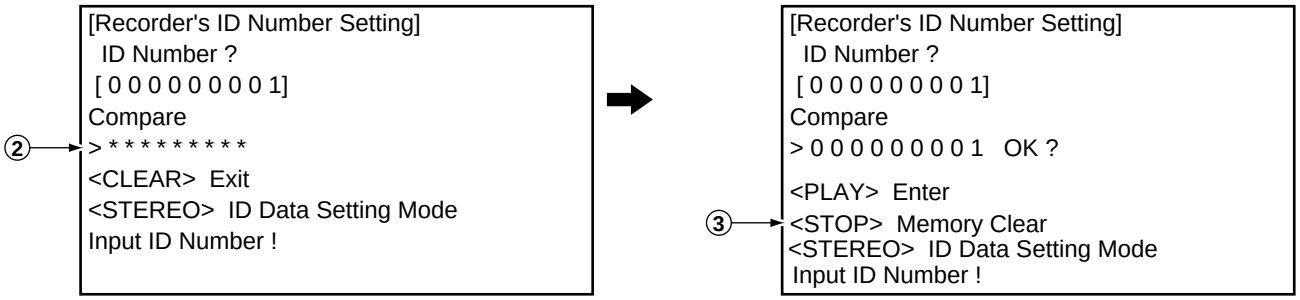

7.1.2 SERVICE MODE

For service operations, use the GGF1381 remote control unit for service.
The Service-mode screens consist of nine mode screens, which are classified into such rough categories as recording system and VR playback system, and their subscreens.

- **How to enter Service mode :** Press the ESC then DISP keys in turn while no GUI is displayed. The first screen (version information, etc.) shown below is displayed.
- **How to exit Service mode :** Press the ESC key.
- **How to advance to the next Service-mode screen**
  : While the first screen is displayed, press directly one of the keys 1-9. For service, use the keys 2, 4 or 5, as shown below.
- **How to advance to a subscreen within the same Service-mode screen**
  : Press the DIG/ANA key. Pressing the DIG/ANA key repeatedly will change the subscreens within the same Service-mode screen cyclically.

■ The Service-mode screens to be used for service are as follows:

1 = First screen: Version information, etc.
2 = Second screen: ATA/ATAPI debug screen (Writer data)
4 = Fourth screen: Error log for the VR recording system
5 = Fifth screen: Error log for the VR playback system

Note: After entering one of the Service-mode screens, if you wish to shift to another Service-mode screen, exit Service mode first, then reenter Service mode and select your desired Service-mode screen.

■ Description of Each Service-mode screen

1. First screen (version information, etc.)

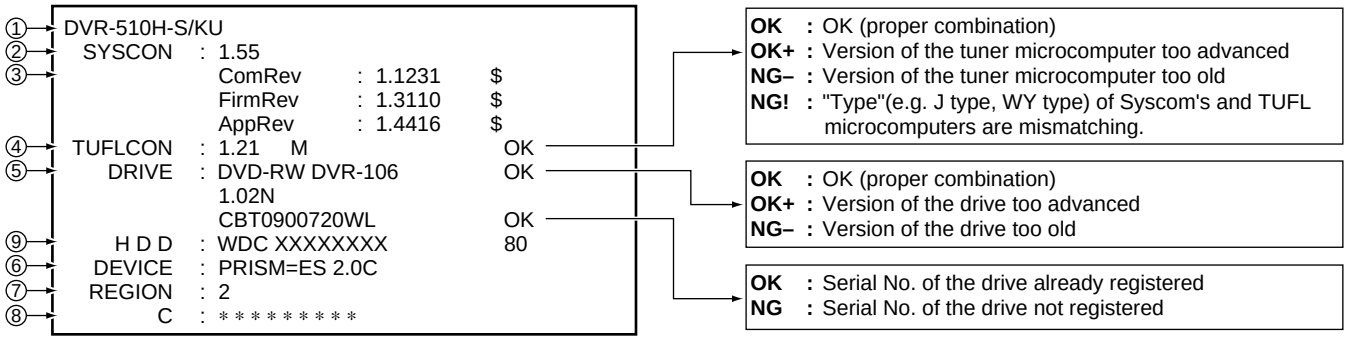

① Model name/destination
② Version of the recorder software
③ Revision No. of the system-control computer software (Edition administration No. [from top to bottom, common software, firmware, application software])
④ Version No. of the tuner microcomputer, Mask or flash (M: Mask type, F: FLASH type)
⑤ Information on the built-in drive (Model name, version No., serial No.)
⑥ Version No. of PRISM
⑦ Region No.
⑧ CPRM data (CPRM key No.)
⑨ Data of the built-in HDD, capacity of the HDD

• Details on HDD data are described below:

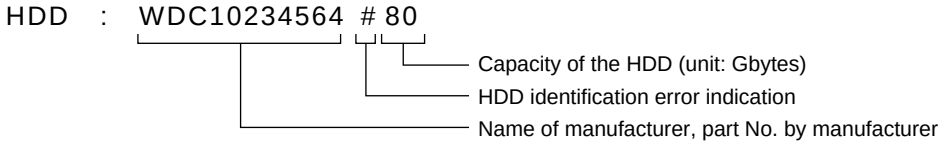

If any abnormality exists in HDD connection, the indications shown in Table 1 below are displayed.

Table 1: HDD data indications according to various HDD connection statuses

HDD identification conditions	Example of HDD data to be displayed	Remarks
Failure in physical identification of HDD (no connection, defective HDD, interface error)	Blank space	
Physical identification of HDD possible, but not identified	WDC 10234564 # 80	"#" is displayed as HDD identification error
Physical identification of HDD possible, HDD identified, but failure in physical formatting	WDC 10234564 ! 80	"!" is displayed as HDD identification error
Physical identification of HDD possible, HDD identified, and correct physical formatting (HDD correctly identified)	WDC 10234564 80	

While the first screen shown above is displayed, press the DIG/ANA key to enter the subscreen shown below.
Note: Each time the DIG/ANA key is pressed, the display changes between the first screen and its subscreen.

• Subscreen 1: Result of error-rate measurement

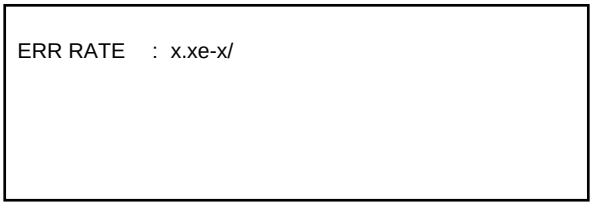

Note: Be sure to start playback after displaying this subscreen to calculate the error rate.

During playback in VR mode, the average error rate of the past 10 VOBUs is displayed, and during playback in DVD-Video or Video mode, the average error rate of the past 256 sectors is displayed. During playback in VR mode, the rotation rate of the drive (/: normal speed, no display = double speed) is also displayed.

• Subscreen 2: HDD information

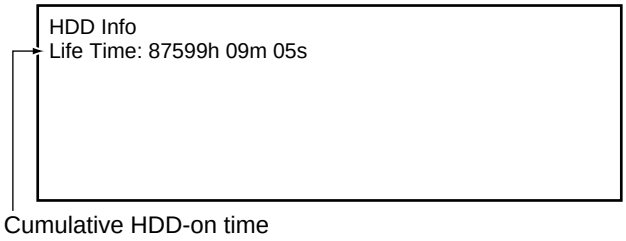

• How the data on cumulative HDD-on time are processed in memory

Storage place: Backup SRAM, Flash ROM

Timing of referring to the data on cumulative HDD-on time: When the power is turned on, the backup SRAM is referred to regarding the data on cumulative HDD-on time, and the data are stored in the RAM. If referring to the backup SRAM fails, the flash ROM is referred to.

Timing of updating the data on cumulative HDD-on time: While the HDD is on, the data on cumulative HDD-on time in the RAM is updated every 3 seconds, and every time updating is executed the data are stored in the backup SRAM. When the power is turned off, the data are stored in the flash ROM.

How to clear the data on cumulative HDD-on time

Backup SRAM: When the HDD Identification Setting is performed, the data on cumulative HDD-on time are automatically cleared. The HDD Identification Setting is automatically performed when the CPRM setting is performed on the CPRM setting screen (to display the CPRM setting screen, press the ESC then the STEREO keys).

Notes: The data on cumulative HDD-on time are not cleared when resetting to factory-preset values is performed.
The data on cumulative HDD-on time are not cleared when the system-control computer software is downloaded.

Flash ROM: The data on cumulative HDD-on time cannot be cleared (they are not cleared even if resetting to factory-preset values is performed or if the system-control computer software is downloaded).

Note: The data on cumulative HDD-on time in the flash ROM can be cleared if you clear the data in the backup SRAM following the above-mentioned procedures then turn off the power of the unit, because the data in the backup SRAM are stored in the flash ROM when the power is turned off.

2. Second screen (ATA/ATAPI debug screen)

Subscreen 1 of the second screen is displayed when the ESC, DISP, then "2" keys are pressed, in that order.
Note: Each time the DIG/ANA key is pressed, the display changes cyclically among subscreens 1 to 4.

• Subscreen 1: Command log (ALL) of ATA/ATAPI DEBUG OSD

```
ATA/ATAPI  History - ALL
  32 0100000000000A000          OK
  32 2A00000DEBB0000063000      OK
  32 2A00000DF1E0000063000      OK
  32 2A00000DF8100006300 0      OK
  32 2A00000DFE4000062000       OK
  32 2A00000E04600006300 0      OK
  32 2A00000E0A900006300 0      OK
  32 2A00000E10C000063000       OK
>32 2A00000E16F00006200023A00
```

• Subscreen 2: Command log (ERROR) of ATA/ATAPI DEBUG OSD

• Subscreen 3: Writer mentenance information of ATA/ATAPI DEBUG OSD

The cumulative power-on time and error log that are administered by the writer are displayed. Such information is obtained when the power is turned on. Thereafter, each time the SEARCH key on the remote control unit for service is pressed while subscreen 3 is displayed, the updating command is sent, and the data on the subscreen are updated. Care must be taken when updating this subscreen, because an undesired command is inserted if it is executed while recording, etc.

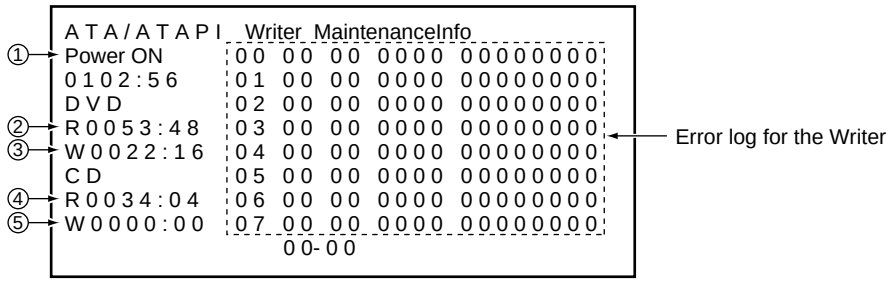

① Power-on time/cumulative power-on time
② Duration of emission of the laser diode (LD) for DVD-R/DVD while reading
③ Duration of emission of the LD for DVD-W/DVD while writing
④ Duration of emission of the LD for CD-R/CD while reading
⑤ Duration of emission of the LD for CD-W/CD while writing

• Subscreen 4: ATA/ATAPI DEBUG OSD_LD degradation judgment

The degrees of degradation of the LD (laser diode) for the writer (LDs for CD and DVD separately), temperature, and RF level are displayed. To update the data on the subscreen, press the SEARCH key on the remote control unit for service while subscreen 4 is displayed. See Table 2 below for a description of each item and the conditions for updating data.

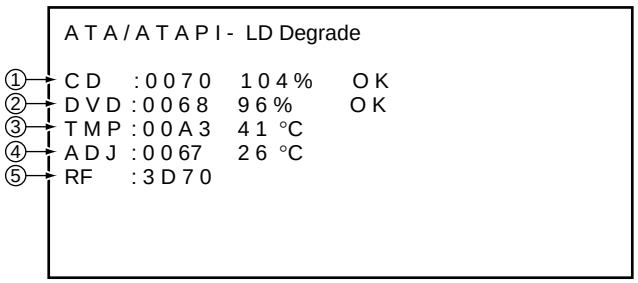

Table 2: Description of each item and conditions for updating data

No.	Item	Description	Conditions for updating by pressing the SEARCH key	Remarks
①	CD	Degradation judgment of LD for CD. Regarded as NG when the value is 120% or higher (same standard as for the PC drive)	No disc inserted in the disc tray	∗1
②	DVD	Degradation judgment of LD for DVD. Regarded as NG when the value is 120% or higher (same standard as for the PC drive)	No disc inserted in the disc tray	∗1
③	TMP	Current temperature inside the Writer	No disc inserted in the disc tray	∗1
④	ADJ	Temperature (approx. 25°C) inside the Writer during adjustment	No disc inserted in the disc tray	∗1
⑤	RF	RF level (16-bit data, proportional calculation performed using the actual RF level value with 2.5 V = 0xFFFF as the maximum value, displayed in 4-digit hexadecimal)	During playback of disc medium	

∗1 : For correct judgment, after leaving the unit at a normal temperature for some time, judgment must be performed immediately after the unit is turned on with no disc loaded.

3. Fourth screen (VR-recording-related error log)

Subscreen 1 of the fourth screen is displayed when the ESC, DISP, then "4" keys are pressed, in that order.
Note: Each time the DIG/ANA key is pressed, the display changes cyclically among subscreens 1 to 11.

• Subscreen 1:

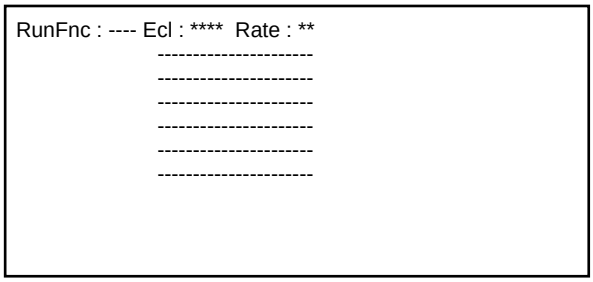

• Subscreens 2 and 3:

These subscreens are not for service use.

• Subscreen 4: Error log for VR recording

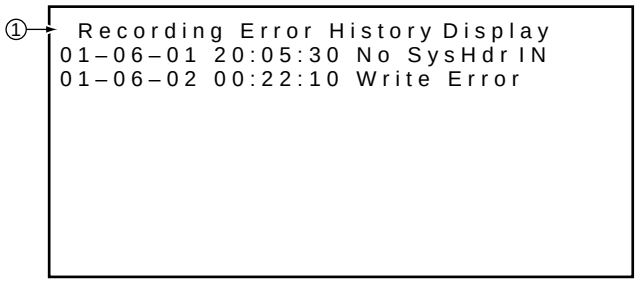

① Recording-related error log for the last 18 errors, divided into 2 screens
(generation time [year-month-day, hour:minute:second], error data in simplified description)

Notes:
• For details on error messages, see Table 4 "Description of VR-recording-related errors".
• The two error-log screens can be switched by pressing the SPEED+ or SPEED- key.

• Subscreens 5 to 11:

These subscreens are not for service use.

4. Fifth screen (Error log for VR playback)

Subscreen 1 of the fifth screen is displayed when the ESC, DISP, then "5" keys are pressed, in that order.
Note: Each time the DIG/ANA key is pressed, the display changes cyclically among subscreens 1 to 4.

• Subscreen 1:

```
G : 0 1–0 1   0 0 m 0 0 s 0 0 # –.  – e – –   0 0 . 0 0 M
Tgt : STOP  Now : STOP  Spd : 0
Man : STOP   Sub : 0  VBF : 000  ABF : 00
TrMd : STOP  TrSt : 0  TNo :     Ver : 00
RvMd : STOP  RvSt : 0  DNo :   Aer : 00
CcSt : STOP       Id : 00000000
Stc : 00000000   Tpp-Av1 : +-0  V-A : +-0
MPEG2  720x480 A0 AC-3 2ch 0256k
NT  ASP : 43  CGMS : 0  APS : 0  Src : 0
END : 00m00s00      Cell : 000
```

• Subscreen 2: Error log for VR playback

```
①→ G : 0 1–0 1   0 0 m 0 0 s 0 0 # –.  – e – –   0 0 0 0 0 0 0 0
        m  s  M e s s a g e                  m   s   E r
   G01 : 0 0 0 0   Tr : N u l l b l k
②→ L 02 : 1 2 3 0   Tr : S c h L a t e
   L 02 : 4 1 0 3   Tp : V o b D i f +
   L 02 : 4 1 0 4   Tp : V o b D o f –
```

① Data on location of the display
Original(G)/play list (L), title No., chapter No. (X:XX-XX), time of the display (min, sec, frame [XXmXXsXX]), busy mark of the virtual mechanical-control computer (#), error rate of the transfer data (X.XeXX), playback logical address (ID [XXXXXXXX])

② Error message log
Original(G)/play list (L), title No., time of generation (min, sec [XXX:XXXX]), playback-related error log for the last 13 errors (XX:XXXXXXX)

Notes:
- For details on error messages, see Table 3 "Description of VR-playback-related errors".
- If a VR-playback-related error is generated, a problem in data reading from the disc may be suspected. (The possibility of a problem on the drive side is high.)

• Subscreens 3 and 4:

These subscreens are not for service use.

Table 3: Description of VR-playback-related errors

Error Message	Description
Tr : NullBlk	Transfer task: NULL at the top block (Detecting NG stream made at the DVR-1000 series and starting protection process.)
Tr : ReadErr	Transfer task: ATA read error
Tr : SchLate	Transfer task: ATA search late
Tr : SemTOvr	Transfer task: Timeout for gaining semaphore (no synchronization with the display)
Tr : NaviErr	Transfer task: Inconsistency between NAVI (navigator) of management data and actual NAVI
Tr : OrderEr	Transfer task: Inconsistent order
Mn : Av1Hang	Main task: Detects hang-up of AV decoder and starts recovery
ERR_RCV!	TPP task: Detects hang-up of AV decoder and starts recovery
Tp : VobDif+	TPP task: The decoder STC advances by 1 VOBU hour.
Tp : VobDif-	TPP task: The STC of the management information advances
Tp : midNULL	TPP task: The management information pointer designated was NULL.
Tp : ScanNg	TPP task: Failure to set the TPP memory when scanning was canceled.
Tp : RStepEr	TPP task: Although the reverse step had failed, the operation was forcibly terminated because the top cell was located.
Tp : tppErr	TPP task: Inconsistency occurred.
Rv : 1stTOvr	Reverse playback task: Timeout for waiting for interruption to the top VOBU immediately after starting decoding
Rv : OpnTOvr	Reverse playback task: Timeout for waiting for B-picture of the open GOP immediately after starting decoding
Rv : OplTOvr	Reverse playback task: Timeout for waiting for I-picture of the open GOP immediately after starting decoding
Rv : LnkTOvr	Reverse playback task: Timeout for waiting for link
Rv : LnkFail	Reverse playback task: Starts compensation by detecting link failure
Rv : R2FTOvr	Reverse playback task: Starts retrial after detecting timeout from reverse pause to forward pause
Rv : TopVbEr	Reverse playback task: Forced termination because of a possible error of the top data during reverse normal playback
Rv : OrderEr	Reverse playback task: Inconsistent order
Av : B/CTOvr	AV1: Buffer-clear timeout
Av : StrmOvr	AV1: Timeout for waiting for stream ready
Av : TpmTOvr	AV1: Timeout for TP mode change
Av : SpmTOvr	AV1: Timeout for a step command
CC_OS_ERR	Closed caption task: OS error

Abbreviations:

STC = System Time Clock
VOBU = Video Object Unit
GOP = Group Of Picture
B-picture = Bidirectionally predictive-picture
I-picture = Intra-picture
P-picture = Predictive-picture
TP mode change = AV1 term (Trick Play mode change)

Table 4: Description of VR-recording-related errors

Error Message	Description	Error Message	Description
Non Err ∗	Normal	Invalid TMVMG	Invalid TMP_VMGI content
DRAM NG	Abnormality in access to the work DRAM	Unmatch Stamp ∗	Impossible to modify because of nonmatching time stamps
SRAM NG	Abnormality in access to the backup work SRAM	Virgin DISC	Blank disc
CPRM IC NG	Inappropriate CPRM IC	Fail Repair	Repair failed
Drive Destroy	The drive has crashed.	ReadOnly DISC ∗	Because some data are invalid, data cannot be written.
MKB REVOKED	Error in gaining data	Rzn Rsv NG	R-zone reserve failed.
WM Cracked	WM cracked	Rzn Cls NG	R-zone Closure failed.
VBR-SRAM NG	Abnormality in VBR SRAM	Rzn Rpr NG	R-zone repair failed.
BK BATT Down	Backup RAM data has been erased.	Bdr Opn	Opening of border failed.
BK FSYS Dirty	Backup RAM data has been written on the file system.	Bdr Cls	Closing of border failed.
Stream NG	Inappropriate input stream data	Format NG	Formatting failed.
Stm Start NG	Failure to start encoding (reasons not clear)	OPC NG	OPC failed.
AVEnc Hang	Inappropriate MPEG encoder	PCA Full	PCA has been used up.
No SysHdr IN	System packet is not input periodically.	RMA Full	RMA has been used up.
Strm Start NG	Timeout waiting for system packet input at the beginning	SW Vrec mode ∗	Switching to video recording routine is required.
IN Encode ∗	Changes cannot be made in the process of encoding	SW Vpb mode ∗	Switching to video playback routine is required.
EncModul Hang	Encoder routine is hung up.	NV Pck MK Err	Error in creating NAVI pack
Ourob Strm NG	Inappropriate stream data to the Ouroboros input	NV Pck DMA Err	Inappropriate NAVI pack DMA
WaterMark Det	Watermark detected	Cell Close NG	Cell closure failed.
BUF Overflow	Overflow of the stream buffer	Something ∗	Undetermined error
Drive Hang	The drive is hung up.	Status NG ∗	Abnormality in change of statuses
Write Err	The drive failed to write and could not be recovered.	Irr Action ∗	Incorrect action
Read Err	Reading failed, ECC failed, etc.	Abort ∗	Cancellation
Drv Hard Err	Abnormality in the drive hardware or firmware	Repair Exec	Repairing has been executed.
Mech No Res	No response from the mechanical-control computer	Format Exec	Formatting has been executed.
Drv TimeOut	Timeout waiting for drive operation	BUG	Some bugs
NWA Exhaust	NWA surpassed and impossible to use	BusReset Done	Bus Reset has been executed.
MKB Invalid	MKB reading error	Task No Activ	Task has not been activated.
Drv Err	General error of the drive	Mem get NG	Video mode memory has not been ensured.
DISC Full	No further data can be written because the disc is full.	V Rsv RzoneNG	Video mode reserve R-zone failed.
No More Info ∗	No more space in the internal work-management area	Tracon Tm NG	Video Mode Tracon transfer has not been completed.
No Perm ∗	No permission to write to the disc	DRAM CLR Err	Video Mode DRAM (Stream Buffer) clear failure
Limit Over ∗	Standard maximum limit exceeded	VTSI_B Wr Err	Video Mode VTSI BUP write error
Rec Pause ∗	No operation permitted during recording pause	VTSI Wr Err	Video Mode write error
No Video ∗	No video input (not locked)	TMP-VMG WrErr	Video Mode TMP VMGI write error
Relocation Do	VR-recording data was relocated.	CLS Rzon Fail	Video Mode Closure R-zone failure
Invalid Param ∗	Invalid parameter	V Categ ID NG	Inappropriate Category ID
Protect Src ∗	Source to be recorded is copy-protected.	V Cate Inf NG	Inappropriate Category information
Now Busy ∗	In the process of the emergency processing	V Ext TY NG	Typing error
Invalid Disc ∗	The disc cannot be recognized.	V Ext MAX Ovr	Count MAX exceeded
Invalid UDF ∗	Invalid UDF content	V ExtfToo Big	The extension file is too large.
Invalid VMG ∗	Invalid VMG content	HDD Destroy	HDD not recognized on the bus.

Notes;

- Any error message marked with ∗ is displayed "RecErr : ---------" on the Subscreen 1 of the fourth screen.
- ▭ : Indicates an error of the MPEG encoder
  ▭ : Indicates an error of the drive system
- In a case of an error in the drive system, scratches or dirt on a disc, or a problem of the drive itself (dirty pickup) may be suspected.

Abbreviations:

ECC = 4 byte Code for Error Correction
UDF = Universal Disc Format
PCA = Power Calibration Area
OPC = Optical Power Control
NWA = Next Writable Address
VMG = Video Manager
RMA = Recording Management Area
MKB = Media Key Block
TMP_VMGI = Temporary Video Manager Information
Border = from Lead-in to Lead-out

Table 5: Description of VR-recording-related errors (related to the HDD)

Error Message	Description
HDD unauthor	Inconsistent HDD serial No.
TT Rec Over	Title recording time full
HDD Reset Done	HDD Reset executed
HDD Buff High	Higher-level process executed for the HDD buffer
HDD Trans Err	DMA error in HDD copy transfer
HDD Zero WR	MBR readout generated
HDD Initialize	HDD initialized
HDD MBR NG	Inconsistent MBR data
HDD SIG NG	Inconsistent HDD Management Data Magic
HDD INFO BAD	Incorrect HDD Management Data
HDD IRRG POFF	Abnormal power off
HDD SMART NG	Inappropriate HDD SMART
VCHDD Info NG	Obtaining Video Mode Copy HDD Cell information failed
VC Pck Anl NG	Analyzing Video Mode Copy Pack failed
VC VOBU SizeE	Inappropriate Video Mode Copy VOBU Size
Strm TransfNG	Inappropriate Video Mode Copy Stream Transfer
VC FlushC NG	Inappropriate Video Mode Copy Flush Cache
VC Transf Stp	Video Mode Copy Transfer Stop
VC CopyCancel	Video Mode Copy Cancel
VC Idling NG	Video Mode Copy idling failed
VC TSO BLK NG	Video Mode Copy TSO Block transfer not completed
VC Cell Max	Maximum number for Video Mode Copy Cells exceeded
VC HDD Inf NG	No information on Video Mode Copy HDD
VC HDD C Err	Inappropriate Video Mode Copy HDD content

Table 6: List of Key Codes

How to enter each check mode

Test mode remote control unit : [A8**]

Remote control unit supplied with the DVR : [AB**]

No.	Check Item	Key Input	Operation / purpose	Remarks
1	EE system (same as preview)	[ESC] → [A.MON]	Turns on/off EE mode cyclically	Make sure that CGMS = 11 becomes when CGMS = 10 is input. EE mode: Simulation mode for recording status
		[PLAY]	Starts the EE system in EE mode (main-unit setting rate)	
		[STOP]	Stops the EE system in EE mode	
2	Error-rate measurement	[ESC] → [SIDEB]	**V-mode recording:** After recording for 10 seconds, the unit starts playback while displaying the error rate. **DVD-Video:** The error rate is automatically measured, then the result will be displayed.	For details, see " 7.1.4 ERROR RATE MEASUREMENT ".
3	Settings for specific areas	[ESC] → [CHP/TIM]	Enters Adjustment mode for AVIO settings	Settings are made for the selected input (TUNER, LINE). For details, see " 7.1.5 SETTINGS FOR SPECIFIC AREAS ".
		[ESC]	Determines the settings, then exits Adjustment mode	

How the ESC code is processed

• When the ESC code is received, ESCAPE mode is entered, but in combination with the code(s) that follow(s), a specific meaning is added.

• If ESC codes are received continuously, ESCAPE mode is retained.

7.1.3 DV DEBUG MODE

Press the ESC, DISP, then "3" keys, in that order.

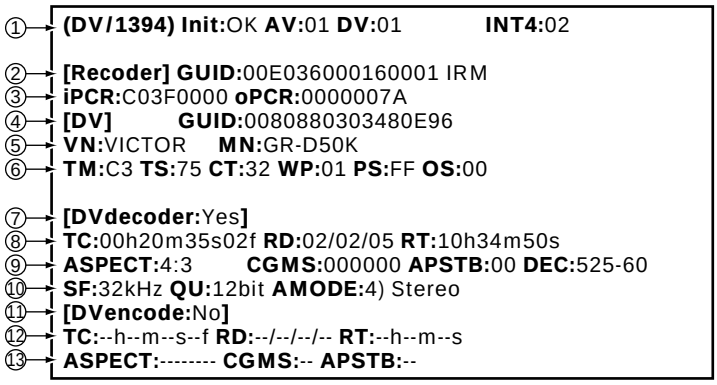

Boldface alphanumerics : Fixed indications
Nonboldface alphanumerics : Variable indications

No.	Item	Description	Remarks
①	Init	Whether the initialization of uPD72893A (1394LINK & DVcodec IC) has been completed (OK) or not (NG)	In a case of NG, communication with uPD72893A may have failed.
	AV	Number of AV devices on the local bus	
	DV	Number of DV devices on the local bus	If the number does not become 01 even if a DV device is connected, identification of that device fails.
	INT4	Number of executing INT4(PIO) interrupt processing routines until a POWER ON notification arrives from uPD72893A (normally, 02)	
②	GUID	GUID set in ConfigROM of the unit	In a case of ROOT (IRM), IRM is displayed at the rightmost of the GUID indication
③	iPCR	iPCR value of the unit	
	oPCR	oPCR value of the unit	
④	GUID	GUID set in ConfigROM of the connected DV device	Data are displayed only if one DV device is identified. If the connected DV device is ROOT (IRM), IRM is displayed at the rightmost of the GUID indication
⑤	VN	Vendor name set in ConfigROM of the connected DV device	Data are displayed only if one DV device is identified. (Depending on the device, the vendor name may not be set in ConfigROM.)
	MN	Model name set in ConfigROM of the connected DV device	Data are displayed only if one DV device is identified. (Depending on the device, the vendor name may not be set in ConfigROM.)
⑥	TM	Transport Mode data obtained from the DV device	Data are displayed only if one DV device is identified.
	TS	Transport State data obtained from the DV device	
	CT	Cassette Type data obtained from the DV device	
	WP	Copy-protection data obtained from the DV device	
	PS	Power-state data obtained from the DV device	
	OS	Output signal mode data obtained from the DV device	
⑦	[DVdecode:XXX]	Whether Yes (in the process of requesting DV input) or No is indicated in XXX	Normally, Yes is indicated only when CH is set to DV

No.	Item	Description	Remarks
⑧	TC	Time-code data of the DVdecode Stream, or response data of the Time Code command	Stream time-code data are obtained when playback in the forward direction is performed. Otherwise, time-code data are obtained through an AV/C command.
	RD	Rec Date of DVdecode Stream	
	RT	Rec Time of DVdecode Stream	
⑨	ASPECT	Aspect Ratio of DVdecode Stream	
	CGMS	CGMS of DVdecode Stream (from left to right, CGMS data of bits 5-4: Audio ch2, bits 3-2: Audio ch1, and bits 1-0: Video)	Recording of DV input cannot be performed unless the value of CGMS is 00.
	APSTB	APS trigger bit of DVdecode stream	
	DEC	With/without DVdecode stream input	With input: Signal type (525-60, 625-50, 1125-60, 1250-50, or Invalid) is indicated, Without input: "No" is indicated.
⑩	SF	Sampling Frequency of DVdecode Stream	If SF is 44 kHz, it is considered that 44.1-kHz audio is input, and sound is muted on the unit.
	QU	QUANTIZATION of DVdecode Stream	
	AMODE	AUDIO MODE of DVdecode Stream	
⑪	[DVencode:XXX]	Whether Yes (in the process of requesting DV output) or No is indicated in XXX	Normally, Yes is indicated only with HDD or DVD playback
⑫	TC	TIME CODE of DVencode stream	
	RD	REC DATE of DVencode stream	
	RT	REC TIME of DVencode stream	
⑬	ASPECT	Aspect Ratio of DVencode stream	
	CGMS	CGMS of DVencode stream (common to video, audio ch1 and audio ch2)	Normally, sources other than CGMS=00 are not output.
	APSTB	APS trigger bit of DVencode stream	

■ Simple Diagnosis

Symptoms	Location in the Debug Screen	Items to be Checked, and Conditions	Possible causes
No operation for either DV input or output	①	Check the init indication: OK: Initialization of DV-related LSIs (IC5101, IC5202) appropriately completed NG: Communication failure between DV-related LSIs (IC5101, IC5202) and HOST microcomputer (IC1001). Initialization of DV-related LSIs (IC5101, IC5202) has not been completed properly.	Defective IC, defective soldering, defective power supply, etc.
		Check the number of DV devices when one DV device is connected to the recorder: 01: The connected DV device is correctly identified. Other than 01: The connected DV device is not correctly identified.	Defective DV terminals, improper connection of the DV-terminal board, defective IC, defective cables, an IEEE 1394 device other than the DV device connected
No picture nor sound for DV input	⑦	Check of DV decoding when the recorder channel is set to DV: Yes: The recorder is in the process of a DV input operation No: The recorder is not executing a DV input operation	Defective IC, defective soldering, defective power supply, etc.
	⑨	Check DEC: 525-60: An NTSC DV signal is input from the DV device. 625-50: A PAL DV signal is input from the DV device. No: No DV signal is input from the DV device.	Defective DV terminals, improper connection of the DV-terminal board, defective IC, defective source device **Note:** As to a model having the Input Line System setting, if the setting and the actual input signal system do not match, no picture appears.
DV input recording impossible	⑨	Check CGMS: 00: A copy-permitted source is being input. Other than 00: A copy-protected source is being input.	Recording cannot be performed for a copy-protected source.
No sound for DV input	⑩	Check SF: 32 khz: An audio signal with 32-kHz sampling frequency is being input. 48 khz: An audio signal with 48-kHz sampling frequency is being input. 44 khz: An audio signal with 44.1-kHz sampling frequency is being input.	An audio signal with 44.1-kHz sampling frequency is muted.
No picture nor sound for DV output	⑪	Check DVencode during DVD/HDD playback: Yes: The recorder is in the process of a DV output operation No: The recorder is not executing a DV output operation (No is also displayed during playback of copy-prohibited sources or simultaneous-recording/playback.)	Defective IC, defective soldering, defective power supply, etc.

7.1.4 ERROR RATE MEASUREMENT

How to enter Error-Rate Measurement mode

Press the ESC key then the SIDE-B key of the remote control unit for service to enter Error-Rate Measurement mode. During playback of DVD-VIDEO, Error-Rate Measurement mode can also be entered by pressing the ESC key then the PLAY key.

How to exit Error-Rate Measurement mode

Press the ESC key. The error-rate display disappears, and Error-Rate Measurement mode is exited.

Note: The error rate cannot be measured in VR mode or during CD playback.

Functions

1. While "DVD" is selected(*)

① -1 Video-mode recording (recording medium)

In this mode, DVD recording is automatically performed for 10 seconds, the recorded DVD title is played back while the error rate is being measured, then as soon as playback of the recorded DVD title is finished, playback stops.*1 After error-rate measurement is finished, the average error rate will be displayed on the FL display and OSD. Only in a case in which the calculation of the average error rate fails, the tray will open.

② -2 DVD-VIDEO (playback medium)

Only during playback, when the ESC key then the SIDE-B key (or the ESC key then the PLAY key) are pressed, the error rate is calculated and displayed on the FL display and OSD.(∗2) Only in a case in which the calculation of the average error rate fails, the tray will open.

2. While "HDD" is selected(*)

In this mode, HDD recording is automatically performed for 10 seconds. Then HDD- to - DVD- copy is performed.
Then DVD is selected automatically and the copied DVD title is played back while the error rate is being measured, then as soon as playback of the recorded DVD title is finished, playback stops. After the error-rate measurement is finished, the average error rate will be displayed on the FL display and OSD. Only in case in which the calculation of the average error rate fails, the tray will open.

(*) : to change the mode between DVD and HDD, press the HDD/DVD key on the front of the recorder.

■ Changes of display

Table 1: Video mode (recording medium) while "DVD" is selected

Operation	Display	
	FL Display	OSD (On Screen Display)
"ERROR RATE" is displayed on the FL display for an instant.	ERROR RATE	
DVD recording starts.	ERROR RATE	
DVD recording is performed for 10 seconds.	xxxxx	
The recorded DVD title is played back while the error rate is being measured, then as soon as playback is finished it stops.	ER x.xE-x	ERR RATE : x.xE-x -
After error-rate measurement is finished (∗1), the average error rate, the measurement-finish mark (∗), and the OK/NG-judgment result (∗3) will be displayed on the FL display and OSD. (If the tray opens as a result of NG judgment, the display on the FL display and OSD will be retained.)	ER x.xE-x	ERR RATE : x.xE-x ∗ OK

Table 2: DVD-Video (playback medium)

Operation	Display	
	FL Display	OSD (On Screen Display)
Only during playback, when the corresponding keys are pressed, the error rate is calculated and displayed on the FL display and OSD. (∗2)	ER x.xE-x	ERR RATE : x.xE-x -
After error-rate measurement is finished (∗1), the average error rate, the measurement-finish mark (∗), and the OK/NG-judgment result (∗3) will be displayed on the FL display and OSD. (If the tray opens as a result of NG judgment, the display on the FL display and OSD will be retained.)	ER x.xE-x	ERR RATE : x.xE-x ∗ OK

Table 3: Video mode (recording medium) while "HDD" is selected

Operation	Display	
	FL Display	OSD (On Screen Display)
"ERROR RATE" is displayed on the FL display for an instant.	ERROR RATE	
HDD recording starts.	ERROR RATE	
HDD recording is performed for 10 seconds, then HDD-to-DVD-copy is performed.	xxxxx	
The copied DVD title is played back while the error rate is being measured, then as soon as playback is finished it stops.	ER x.xE-x	ERR RATE : x.xE-x -
After error-rate measurement is finished (∗1), the average error rate, the measurement-finish mark (∗), and the OK/NG-judgment result (∗3) will be displayed on the FL display and OSD. (If the tray opens as a result of NG judgment, the display on the FL display and OSD will be retained.)	ER x.xE-x	ERR RATE : x.xE-x ∗ OK

∗1 : Whether error-rate measurement is finished or not is judged, as shown in Table 4 below.

Table 4: On judgment whether error-rate measurement is finished or not

Recording Mode	Judgment whether error-rate measurement is finished or not	Recording/playback duration required for error-rate measurement
Video mode	After playback of a certain amount (∗) of data Measurement of the 16 ECC blocks is performed 16 times, then the grand sum is used for calculation of the error rate. The capacity is as follows: 16 ECC blocks × 16 sectors × 2048 bytes × 16 times = 8388608 bytes = 67108864 bits	The time required for completion of error-rate measurement varies, depending on the input video signal to be recorded. (The more the motion in the input video signal to be recorded is animated, the shorter the playback time required for completion of error-rate measurement becomes.)

∗2 : During DVD-VIDEO error-rate measurement, even after error-rate measurement is finished, playback continues, and the display of the error rate results is retained. In this playback mode, if Error-Rate Measurement mode is exited by pressing the ESC key, then it is reentered by pressing the ESC and SIDE-B keys (or ESC and PLAY keys), the error rate will not be updated, and the previous value is displayed. To reset the previous error rate, stop disc playback.

∗3 : OK/NG judgment
In DVD/VIDEO and Video Mode recording, OK/NG judgment is displayed under the following conditions:

Table 5: List of OK/NG threshold values

Disc Type	Recording Mode	Finalized or not finalized	Reference Value	Display
DVD-VIDEO			8.0×10^{-4}	OK / NG
DVD-R	Video mode	Finalized	1.0×10^{-3}	OK / NG
		Not finalized	1.0×10^{-3}	OK / NG
DVD-RW	Video mode	Finalized	1.0×10^{-3}	OK / NG
		Not finalized	1.0×10^{-3}	OK / NG

7.1.5 VIDEO ADJUSTMENT FOR SPECIFIC AREA

Purposes: Depending on the area, jitter may appear in a picture received by the tuner, as conditions of signals received by the tuner are different from area to area. To correct this kind of problem, the function of the System Codec AVIO control section for adjusting signals received by the tuner can be used.

How to enter setting modes: To enter General Setting mode, press the ESC key then the CHP/TIM key of the remote control unit for service. To enter Specific Channel Setting mode, press the DIG/ANA key in General Setting mode.

How to exit setting modes: Press the ESC key. The setting mode is exited, the OSD disappears.

1. General Setting mode

This mode can be entered only during recording/playback stop. In this mode, each item and its current settings are displayed on the OSD. The currently selected input mode (TUNER or LINE) is displayed. If L1, L2, L3 or DV is selected for input, general settings for the line input can be made, and if TUNER is selected, general settings for the tuner input can be made.

[General Setting mode] (∗2)

```
AVIO Specific Area Mode
Input - [ TUNER ]
Sync AGC        : ON              ∗
Threshold       : Manual Threshold Level
Threshold Level : 0               ∗
```

∗ : setting is the default.

Table 1: Key operations in General Setting mode (effective only during recording/playback stop)

Key	Operation	Setting (∗: Default)	Remarks
INPUT SELECT, CHANNEL +/– (∗R)	Switches inputs or channels.	–	–
◄ ×3, ×3 ► (∗1)	Sets Sync AGC.	ON (∗) / OFF	–
I◄◄ CHAPTER SKIP, CHAPTER SKIP ►►I (∗1)	Sets Threshold.	(∗) Normal Auto Threshold Level Manual Threshold Level Pedestal Level	–
◄II STILL STEP, STILL STEP II► (∗1)	Sets Threshold level.	According to the setting of Threshold, the values can be changed within the range mentioned below.	–
		• Normal: The value is fixed, with no display of the value.	–
		• Auto Threshold Level: 0-8 (Default: 0)	The value can be changed with the ◄II or II► key.
		• Manual Threshold Level: 0-8 (Default: 0)	The value can be changed with the ◄II or II► key.
		• Pedestal Level: 0-8 (Default: 0)	The value can be changed with the ◄II or II► key.
CLEAR (∗1)	Initializes the setting of General Setting mode.	–	Pressing the key resets all settings of General Setting mode to the initial values. Settings of Specific Channel Setting mode are not affected (they are retained).
ESC	Exits AVIO setting for specific areas, clearing the OSD.	–	–

∗R: Refers to keys on the remote control unit supplied with this unit. The keys without "R" refer to the remote control unit for service.

∗1 : When a setting value is changed, that value is immediately displayed and is stored in nonvolatile memory.
• Settings made will not be reset to the default settings even if resetting to the factory-preset values is performed.

∗2 : In General Setting mode, if the channel displayed has specific settings, the following will be displayed.

[Display in General Setting mode when the channel currently displayed has specific settings]

```
AVIO Specific Area Mode
Input - [ TUNER ]
Sync AGC         : ON              *
Threshold        : Manual Threshold Level
Threshold Level  : 0               *

    This channel is set up
    individually.
```

2. Specific Channel Setting mode

This mode is entered when the DIG/ANA key is pressed in General Setting mode. In this mode, specific settings can be made for up to 12 channels. For channels that do not have specific settings, the settings of General Setting mode are applied.
Display in Specific Channel Setting mode (A picture from the tuner can be viewed using the semitransparent OSD display.)

[Display in Specific Channel Setting mode]

[When specific channel settings have NOT been made]

```
AVIO Specific Area Mode
Input - [ TUNER ]                          ──► General Setting data
Sync AGC         : ON              *
Threshold        : Manual Threshold Level
Threshold Level  : 0               *
Individual setting state
Input Channel - [    1CH]                  ──► Specific Channel
Sync AGC         : ---                         Setting data
Threshold        : ------
Threshold Level  : --h
```

[When specific channel settings have been made]

```
AVIO Specific Area Mode
Input - [ TUNER ]
Sync AGC         : ON              *
Threshold        : Manual Threshold Level
Threshold Level  : 2
Individual setting state
Input Channel - [    1CH]
Sync AGC         : ON
Threshold        : Manual Threshhold Level
Threshold Level  : 3
```

∗ : setting is the default.

- If a channel that does not have specific settings is displayed, the setting figures are displayed as hyphens (--).
  If the setting figures are not displayed as hyphens, those settings have been specifically set even if they are identical to the default settings or those of General Setting mode.
- The channels to be displayed in "Input Channel" are as follows:
  - In a case of line input: L1-L3, DV
  - In a case of tuner input: Received channel (a channel to be set in specific channel settings)

Table 2: Key operations in Specific Channel Setting mode

(effective only during recording/playback stop)

Key	Operation	Setting (∗: Default)	Remarks
DIG/ANA	Switches cyclically between General Setting mode and Specific Channel Setting mode.	–	–
INPUT SELECT, CHANNEL +/– (∗R)	Switches inputs or channels.	–	–
◄ ×3, ×3 ► (∗1)	Sets Sync AGC.	ON (∗) / OFF	–
I◄◄ CHAPTER SKIP, CHAPTER SKIP ►►I	Sets Threshold.	(∗) Normal Auto Threshold Level Manual Threshold Level Pedestal Level	–
◄II STILL STEP, STILL STEP II►	Sets Threshold level.	According to the setting of Threshold, the values can be changed within the range mentioned below.	–
		• Normal: The value is fixed, with no display of the value.	–
		• Auto Threshold Level: 0-8 (Default: 0)	The value can be changed with the ◄II or II► key.
		• Manual Threshold Level: 0-8 (Default: 0)	The value can be changed with the ◄II or II► key.
		• Pedestal Level: 0-8 (Default: 0)	The value can be changed with the ◄II or II► key.
PLAY	All channels assigned to have specific settings are canceled, and the specific settings are reset to their default values.	–	Settings of General Setting mode are not affected.
CLEAR	If the channel currently selected is assigned to have specific settings, that assignment is canceled. (If that channel is canceled, the number of remaining channels for which specific channel settings can be made increases by 1.)	–	Pressing the key resets the settings of Specific Channel Setting mode for that channel to the initial values. Settings of General Setting mode are not affected.
PAUSE	The specific-setting data for the currently selected channel are reset to their default values. (But the assignment of a channel having specific settings is not canceled.)	–	Pressing the key resets the settings of Specific Channel Setting mode for that channel to the initial values. Settings of General Setting mode are not affected (retained).
ESC	Exits AVIO setting for specific areas, clearing the OSD.	–	–

∗R: Refers to keys on the remote control unit supplied with this unit. The keys without "R" refer to the remote control unit for service.

- Settings made will not be reset to the default settings even if resetting to the factory-preset values is performed.
- Screen display when Specific Channel settings are made on 12 (maximum) channels: In such a case. If a channel which does not have specific settings is selected, the individual setting state for that channel is not displayed, as shown in the figure below, and the settings cannot be modified. In such a case, if you wish to make Specific Channel Settings for the currently selected channel, you must clear the Specific Channel Settings for one or more channels beforehand.

[With 12 channels having specific settings,
when the currently selected channel does not have specific settings]

```
AVIO Specific Area Mode
Input - [ TUNER ]
Sync AGC        : ON            *
Threshold       : Manual Threshold Level
Threshold Level : 3
Individual setting state
  Sorry !
You can store only 12 channels
for Specific Area mode.
```

7.1.6 SETUP SEQUENCE

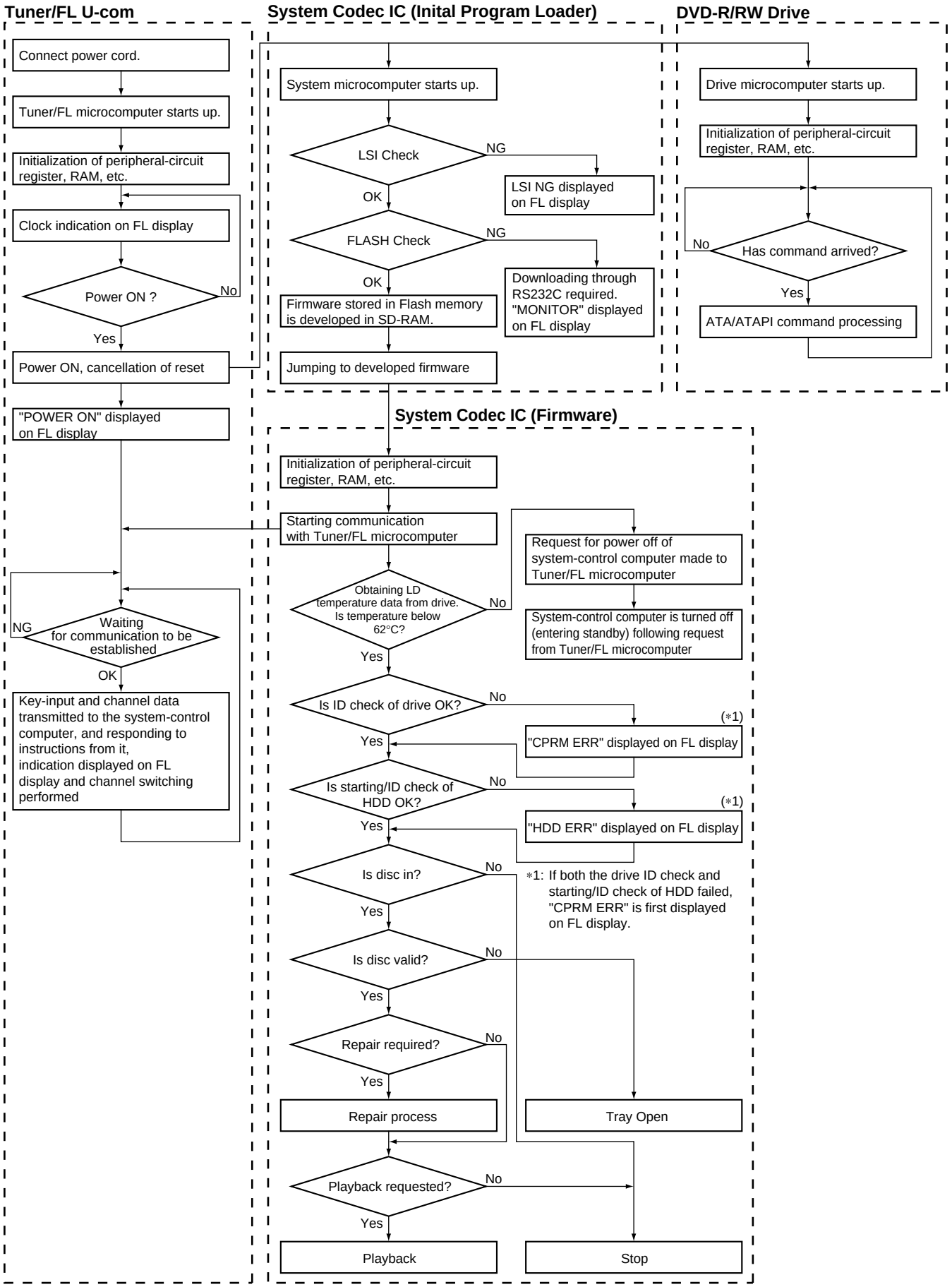

7.1.7 DISASSEMBLY

Note : When remove the HDD and diagnose it, order the ATAB Assy (VWV1968) and a flexible cable (40P) (VDA1977) using for connection of DRIVE Assy R6. And use it as cable extension.

1 Bonnet S, Tray Panel Assy

① Remove the bonnet by removing the eight screws.
② Press the ⏻ STANDBY/ON button to turn on the power.
③ Press the ⏏ button to open the tray.
④ Remove the tray panel assy.
⑤ Press the ⏏ button to close the tray.
⑥ Press the ⏻ STANDBY/ON button to turn off the power.

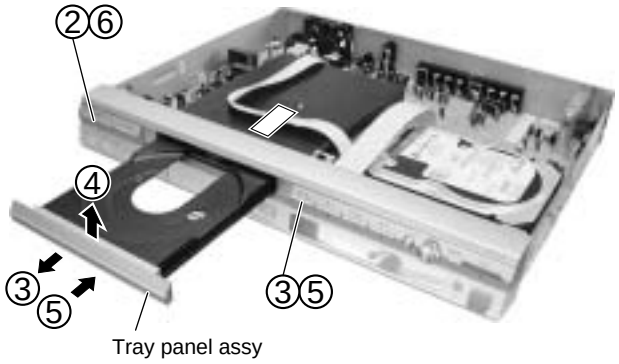

● **How to open the tray when the power cannot be on**

When the player cannot eject disc tray due to power failure or any other reasons, open the jack door, and use a long thin pole and push the emergency eject hole under the tray panel to eject.

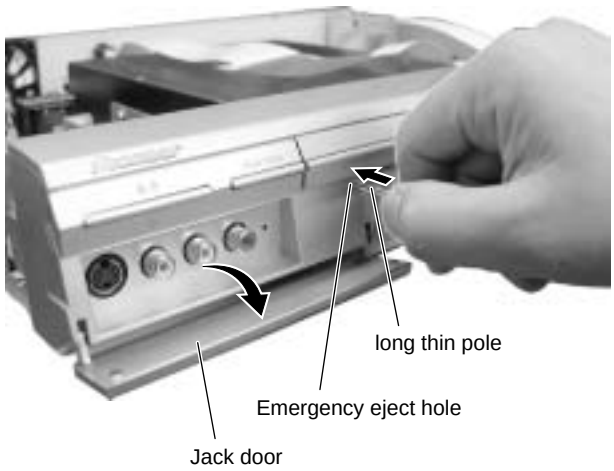

2 Front Panel Section

① Remove the two screws.
② Remove the four hooks.
③ Remove the front panel section.

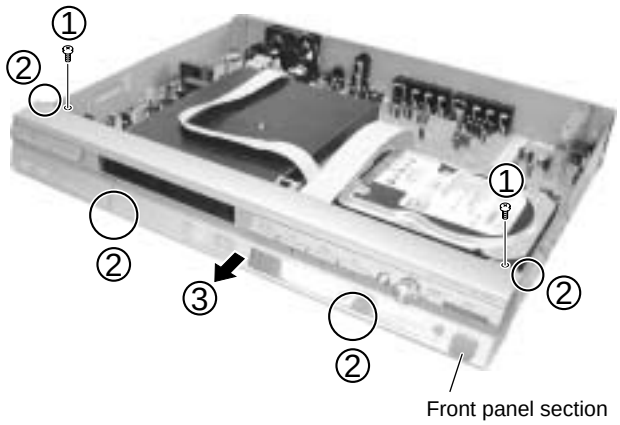

3 HDD

① Disconnect the two connectors.
② Remove the two screws.
③ Remove the three screws.
④ Remove the aluminum tape from the HDD side.
⑤ Remove the HDD with HDD stay.

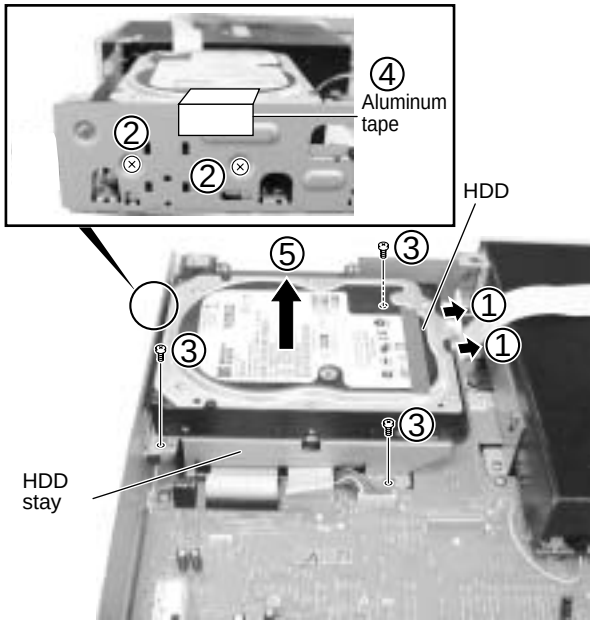

4 DRIVE Assy R6

① Remove the two screws.
② Remove the five screws.
③ Disconnect the connector.
④ Remove the DRIVE Assy R6.

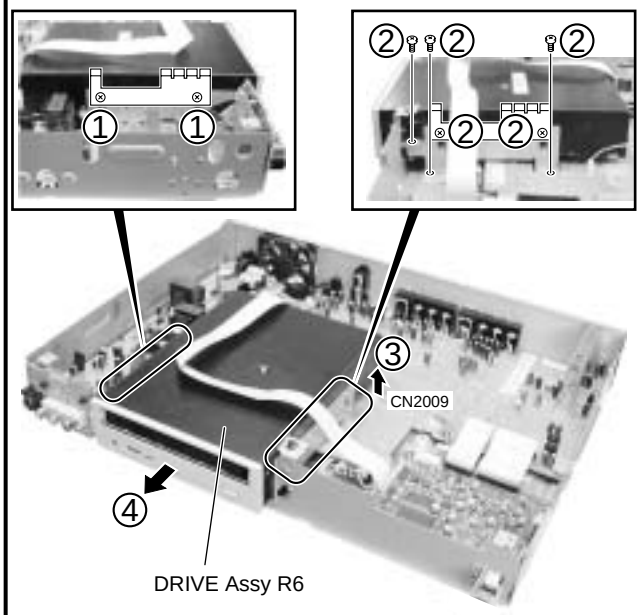

5 MAIN Assy

① Remove the four screws.
② Disconnect the flexible cable from DVJB Assy.
③ Stand the MAIN Assy.

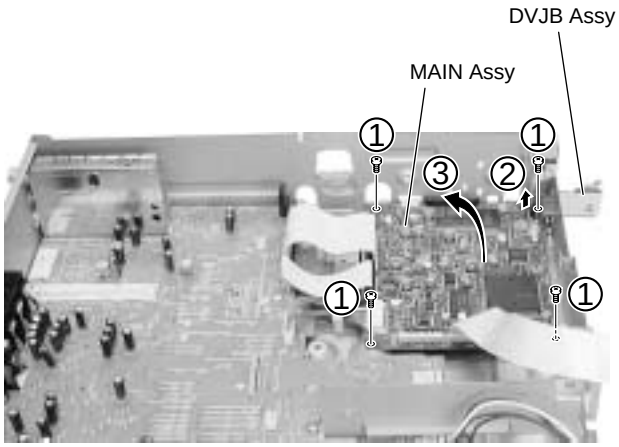

6 Diagnosis

① Insert the insulation sheet between the MAIN Assy and chassis.
② Arrange the unit as shown in the photo below.

Caution: MAIN IC (IC1001) on the MAIN Assy generate heat to around 80 degrees.
Be careful when works.

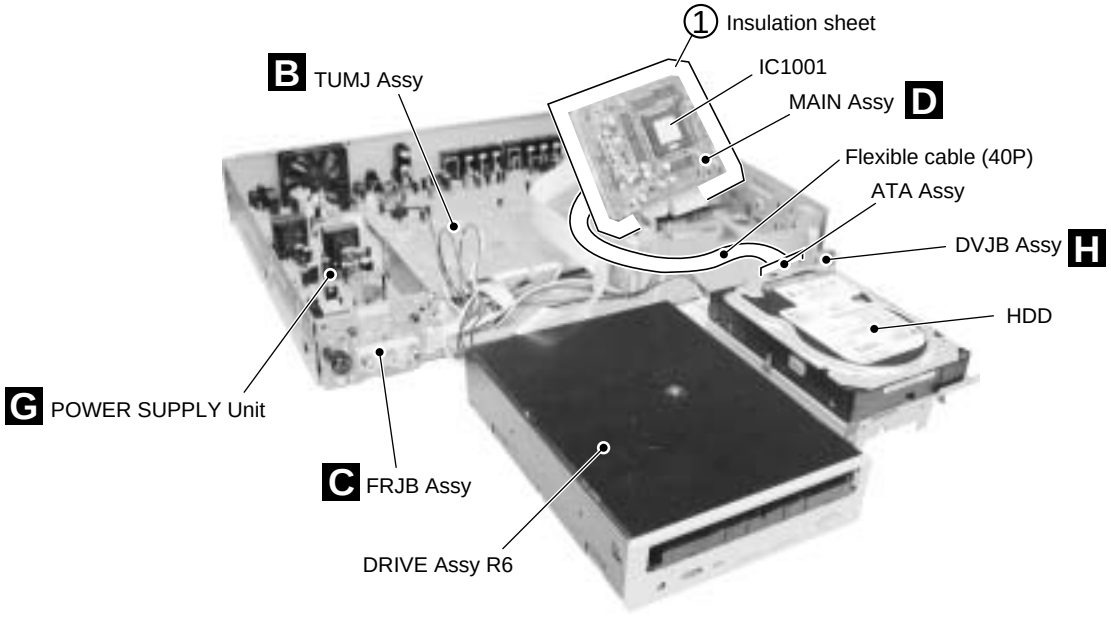

7 DRIVE Assy R6 (DVD-R/RW WRITER)

① Remove the four aluminium tape.
② Remove the four screws.

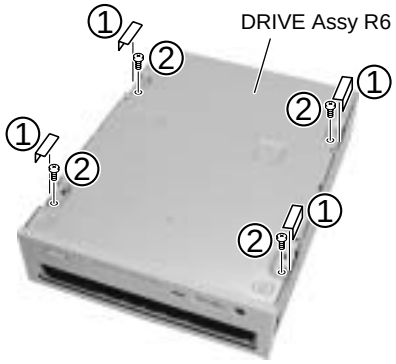

③ Remove the one screw.
④ Remove the front bezel by removing the two hooks.

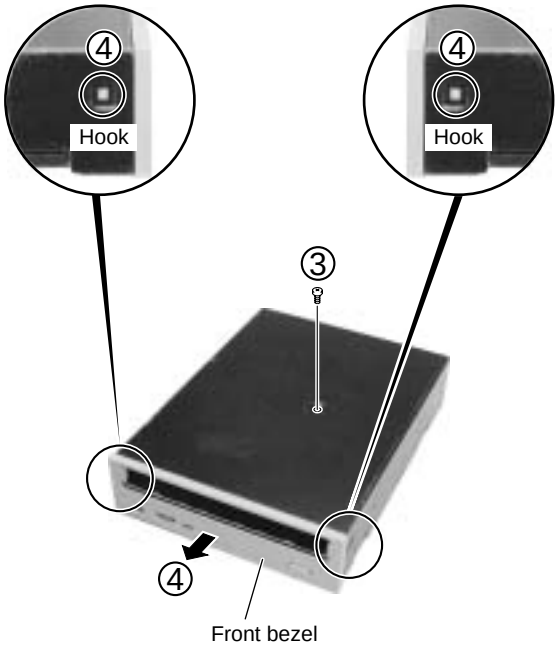

⑤ Remove the bonnet.

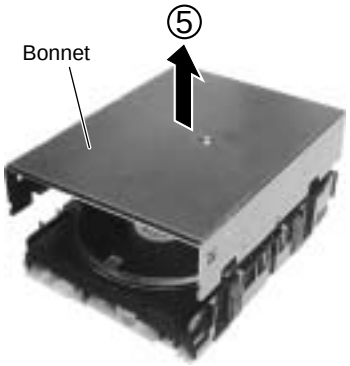

⑥ Remove the clamper holder by removing the four screws.

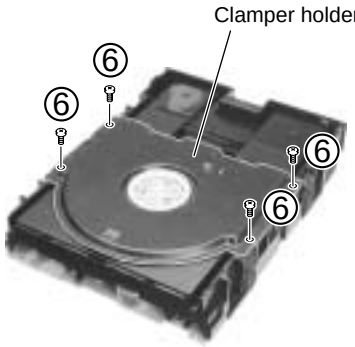

⑦ Clean the pickup lens.

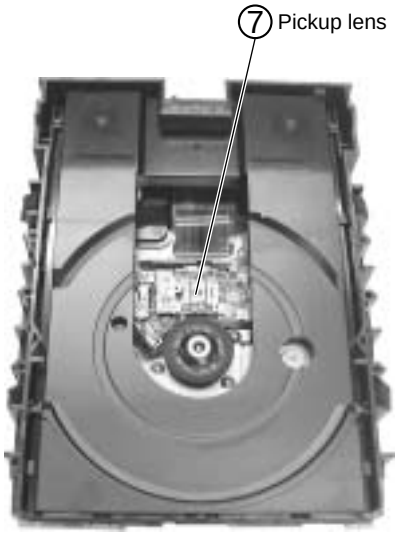

7.2 IC

• The information shown in the list is basic information and may not correspond exactly to that shown in the schematic diagrams.

● **List of IC**

PD5942A8, RS5C372A, LC75342M, AK5381VT, PST3428U, PST3809U, NJM2880U1-33, M65672WG-C, UPD72852AGB-8EU, UPD72893AGD-LML

■ PD5942A8 (TUMJ ASSY : IC2001)

• TUFL Microcomputer

● **Pin Function**

No.	Pin Name	Signal Name	I/O	Function	Active
1	P95/ANEX0/CLK4	FLCLK	O	FL Driver communication line CLK	–
2	P94/DA1/TB4in	SYNC	I	C-Sync of input video	↑
3	P93/DA0/TB3in	AVLINKIN	I	Input line of NexTViewLink	–
4	P92/TB2in/Sout3	IR	I	Pulse input of remote control	–
5	P91/TB1in/Sin3	J_CLOCK	I		
6	P90/TB0in/CLK3	SYNCAFT	I	C-Sync of input video	↑
7	BYTE	BYTE	I		
8	CNVss	PGM	I	Communication line	
9	P87/XCin	NC	(O)		–
10	P86/XCout	NC	(O)		–
11	-RESET	XRESETIN	I	u-Con Reset	
12	Xout	XOUT	I		
13	Vss	GND	–		
14	Xin	XIN	I		
15	Vcc	VCC	–		
16	P85/-NMI	NMI	I		↓
17	P84/-INT2	JOGA	I	Phase VOL input	↑↓
18	P83/-INT1	SLICEONFB	I	Feedback from SLICEON pin	↑?
19	P82/-INT0	XINTRA	I	Alarm/interval interruption	↓
20	P81/TA4in	NC	(O)		–
21	P80/TA4out	NC	(O)		–
22	P77/TA3in	NC	(O)		–
23	P76/TA3out	FANPWM	O	FAN power control	H
24	P75/TA2in	JOGB	I	Phase VOL input	↑↓
25	P74/TA2out	NC	(O)		–
26	P73/-CTS2/-RTS2/TA1in	IICRST	O		
27	P72/CLK2/TA1out	AVLINKOUT	O		
28	P71/RxD2/SCL/TA0in/TB5in	SCL	I/O	I2C communication (clock)	–
29	P70/TxD2/SDA/TA0out	SDA	I/O	I2C communication (data)	–
30	Vss2	GND	–		
31	LP2	LP2	O		
32	LP3	LP3	O		
33	LP4	LP4	O		
34	Vdd2	VDD2	–		
35	M2	M2	I	Mode switch	
36	M1	M1	I		
37	P11/SLICEON	SLICEON	O	Slicer operating signal	H?
38	P67/TxD1	TXD	O	Communication line for firmware download/monitor	–
39	P66/RxD1	RXD	I	Communication line for firmware download/monitor	–
40	P65/CLK1	SCLK	(O)	Communication line for firmware download/monitor	–

No.	Pin Name	Signal Name	I/O	Function	Active
41	P64/-CTS1/-RTS1/CLKS1	BUSY	O	Communication line for firmware download/monitor	–
42	P63/TxD0	SSTTOM	O	SYS controller communication line (Tuner → Main)	–
43	P62/RxD0	SSMTOT	I	SYS controller communication line (Main → Tuner)	–
44	P61/CLK0	SCK	I	SYS controller communication line (clock)	↑
45	P60/-CTS0/-RTS0	HSTTOM	O	Tuner → SYS handshake	L
46	P57/-RDY/CLKout	DLCONT	O	Voltage supply SW of FLASH-ROM writing	L
47	P56/ALE	WRT	O	Write signal	H
48	P55/-HOLD	SDAEEP	I/O	SDA line for EEPROM	–
49	P54/-HLDA	SCLEEP	O	SCL line for EEPROM	–
50	P53/BCLK	VOLCE	O	Communication line CE	H
51	P52/-RD	VOLDATA	O	Communication line DATA	–
52	P51/-WRH/-BHE	VOLCLK	O	Communication line CLK	–
53	P50/-WRL/-WR	DLCE	I	Signal for serial I/O mode selection	–
54	P47/-CS3	S1	O		
55	P46/-CS2	LET	O	Letterbox signal add	H
56	P45/-CS1	SQU	O	Squeeze signal add	–
57	P44/-CS0	BLANK	I		
58	P43/A19	XTHROU	O		
59	P42/A18	NC	(O)		–
60	P41/A17	SEL1	O	Parallel control (for audio switch)	–
61	P40/A16	SWVION	O	Independent source SW for video I/O output circuit	H
62	P37/A15	SWSTBY	O	Standby mode of video input selector	H
63	P36/A14	BS15ON	O		
64	P35/A13	BS15SRT	I		
65	P34/A12	SCTHRU	O		
66	P33/A11	BS15IN	I		
67	P32/A10	SDET3	I	S terminal detection of Video input 3	L
68	P31/A9	SDET2	I	S terminal detection of Video input 2	L
69	Vcc	VCC	–		
70	P30/A8	SDET1	I	S terminal detection of Video input 1	L
71	Vss	GND	–		
72	P27/A7	SELV1	O	Parallel control	–
73	P26/A6	SELV2	O	Parallel control	–
74	P25/A5	SELV3	O	Parallel control	–
75	P24/A4	YVSEL	O	CVBS/YC switch of Video input selector	–
76	P23/A3	P_SAVEBS	O		
77	P22/A2	FOMO	O		–
78	P21/A1	M1ONTA	O		–
79	P20/A0	P_CONT	O	System Power ON	H
80	P17/D15/-INT5	NC	(O)		–

No.	Pin Name	Signal Name	I/O	Function	Active
81	P16/D14/-INT4	HSMTOT	I	SYS → Tuner handshake	↓
82	P15/D13/-INT3	DCTRI	I		
83	P14/D12	MUTE	O	MUTE control	H
84	P13/D11	SU/SAPID	I	SAP detection	H
85	P12/D10	ST/STID	I	Stereo detection (STID)	H
86	P11/D9	XRESET	O	System Reset output	L
87	P10/D8	LDASH	O		
88	P07/D7	STBYQ	O		
89	P06/D6	LM/	O		
90	P05/D5	I/BG	O		
91	P04/D4	XP_SAVE	O		
92	P03/D3	TUON	O	Tuner power	H
93	P02/D2	YCSW	O		
94	P01/D1	RSTCTL	O	Reset signal mask from the system controller	L
95	P00/D0	FLPON	O	FL Driver Power ON	H
96	P107/AN7/-KI3	MODEL1	A/D IN	Input for destination judgment	–
97	P106/AN6/-KI2	MODEL2	A/D IN	Input for destination judgment	–
98	P105/AN5/-KI1	AGC	A/D IN	Field intensity detection	–
99	P104/AN4/-KI0	FUNC	A/D IN		
100	P103/AN3	KEY2	A/D IN	Main unit key input	–
101	P102/AN2	KEY1	A/D IN	Main unit key input	–
102	P101/AN1	C/N	A/D IN		
103	Avss	GND	–		
104	P100/AN0	AFT	A/D IN	AFT voltage input	–
105	VREF	VREF	–		
106	AVcc	AVCC	–		
107	P97/-ADTRG/Sin4	FLSTB	O	Communication line strobe of FL driver	L
108	Vdd1	VDD1	–		
109	SYNCIN	SYNCTEXT	I	Video input for sync. sep.	
110	SVREF	SLICE	I	Slice level input	
111	Vss1	GND	–		
112	Vdd3	VDD3	–		
113	CVIN1	CVIN1	I	Video input for teletext	
114	Vss3	GND	–		
115	FSCIN	FSCIN	I	Fsc input	
116	P96/ANEX1/Sout4	FLDATA	O	Communication line data of FL driver	–

■ RS5C372A (TUMJ ASSY : IC2271)

• Real Time Clock IC

● Block Diagram

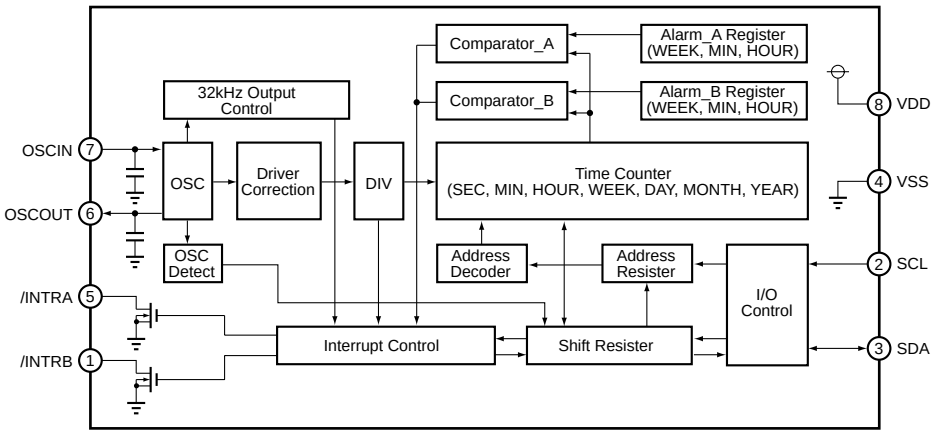

● Pin Function

No.	Pin Name	I/O	Function	
1	/INTRB	O	Interruption output B The output of 32.768kHz (in 32768Hz crystal use), cycled interrupt for CPU, or output alarm interrupt (ALARM_B). This pin output 32.768kHz when activated power from 0V. Nch open drain output.	
2	SCL	I	Shift clock input Synchronize with this clock, and input and output data from a SDA terminal. Exceed VDD, and can input to 6V.	
3	SDA	I/O	Serial input and output Synchronize with SCL, and input and output writing data or readout data. Exceed VDD, and can input to 6V. Nch open drain output in the output.	
4	VSS	–	Ground pin	
5	/INTRA	O	Interruption output A Cycled interrupt for CPU, or output alarm interruption (ALARM_A, ALARM_B). This pin becomes an OFF state when activated power from 0V. N ch open drain output.	
6	OSCOUT	O	Oscillation circuit output	Connect a crystal resonator of 32.768kHz or 32.000kHz between OSCIN and OSCOUT, and constitute oscillation circuit. (component parts of oscillation circuit except crystal resonator have it built-in.)
7	OSCIN	I	Oscillation circuit input	
8	VDD	–	Positive supply input	

LC75342M (TUMJ ASSY : IC2801)

• Electric Volume IC

● Block Diagram

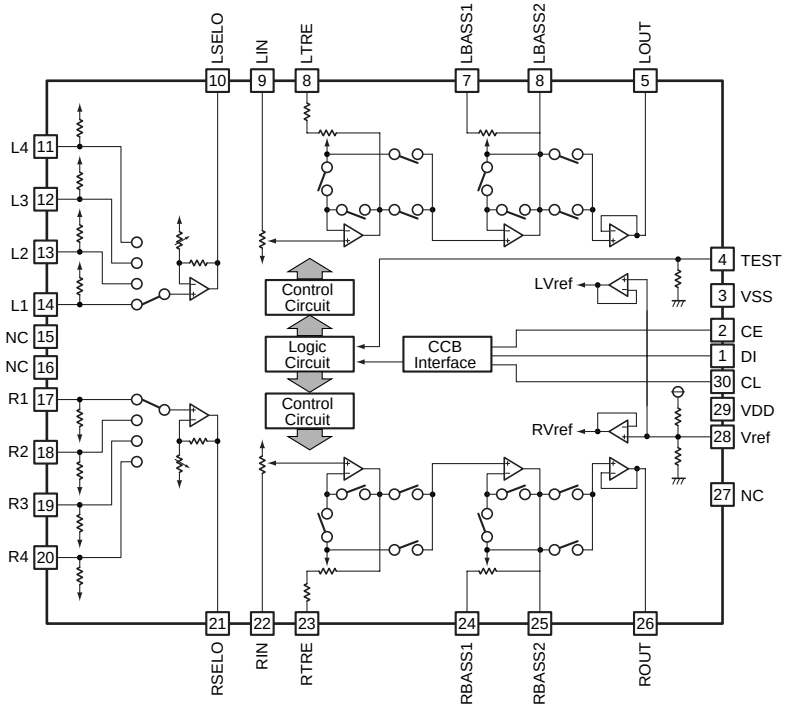

● Pin Function

No.	Pin Name	Function	No.	Pin Name	Function
1	DI	Serial data input for control	16	NC	Not connected
2	CE	Chip enable pin Data are written in the internal latch by a timing of "H" → "L", and each analog switch works. Data transfer is enabled by "H" level.	17	R1	Input signal pin
3	VSS	Ground pin	18	R2	
4	TEST	Pin for electronic volume test Set to VSS electric potential.	19	R3	
5	LOUT	Volume and equalizer output pin	20	R4	
6	LBASS2	Capacitor and resistor connection pins for bus bandpass filter	21	RSELO	Input selector output pin
7	LBASS1		22	RIN	Volume and equalizer input pin
8	LTRE	Capacitor connection pin for treble bandpass filter	23	RTRE	Capacitor connection pin for treble bandpass filter
9	LIN	Volume and equalizer input pin	24	RBASS1	Capacitor and resistor connection pins for bus bandpass filter
10	LSELO	Input selector output pin	25	RBASS2	
11	L4	Input signal pins	26	ROUT	Volume and equalizer output pin
12	L3		27	NC	Not connected
13	L2		28	Vref	0.5XVDD voltage generation block
14	L1		29	VDD	Power supply pin
15	NC	Not connected	30	CL	Clock input pin for control

AK5381VT (MAIN ASSY : IC3101)

• 96kHz 24 bit ΔΣ ADC

● Pin Arrangement (Top view)

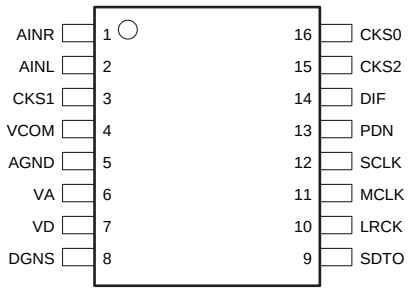

● Block Diagram

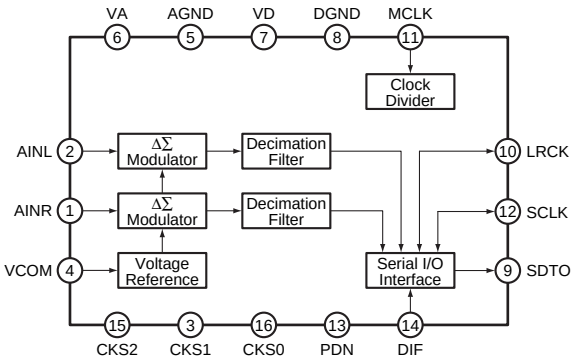

● Pin Function

No.	Pin Name	I/O	Function
1	AINR	I	R ch analog input
2	AINL	I	L ch analog input
3	CKS1	I	Mode select 1
4	VCOM	O	Common voltage output, bias voltage of VA/2 and ADC input
5	AGND	–	Analog ground
6	VA	–	Analog power supply, 4.5V to 5.5V
7	VD	–	Digital power supply, 2.7 to 5.5V (fs = 4k to 48kHz), 3.0 to 5.5V (fs = 48k to 96kHz)
8	DGND	–	Digital ground
9	SDTO	O	Audio serial data output, outputs "L" in the power down mode.
10	LRCK	I/O	Channel clock I/O, outputs "L" by master mode in the power down mode.
11	MCLK	I	Master clock input
12	SCLK	I/O	Audio serial data clock, outputs "L" by master mode in the power down mode.
13	PDN	I	Power down mode "H": power up, "L": power down
14	DIF	I	Audio interface format, "H" : 24 bit I2S compatibility, "L" : 24 bit MSB justify
15	CKS2	I	Mode select 2
16	CKS0	I	Mode select 0

■ PST3428U (MAIN ASSY : IC4003)

• Reset IC

● Pin Arrangement (Top view)

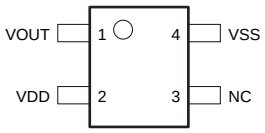

● Block Diagram

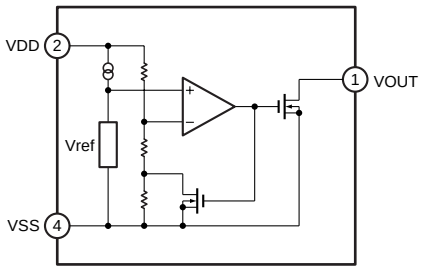

● Pin Function

No.	Pin Name	Function
1	VOUT	Reset signal output
2	VDD	Power supply / voltage detection
3	NC	Not connected
4	VSS	VSS

■ PST3809U (MAIN ASSY : IC4005)

• Reset IC

● Pin Arrangement (Top view)

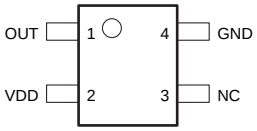

● Block Diagram

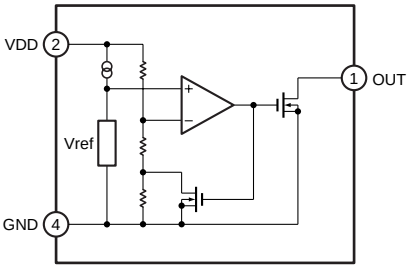

● Pin Function

No.	Pin Name	Function
1	OUT	Reset signal output
2	VDD	Power supply / voltage detection
3	NC	Not connected
4	GND	Ground

NJM2880U1-33 (MAIN ASSY : IC4007)

• Regulator IC

● Pin Arrangement (Top view)

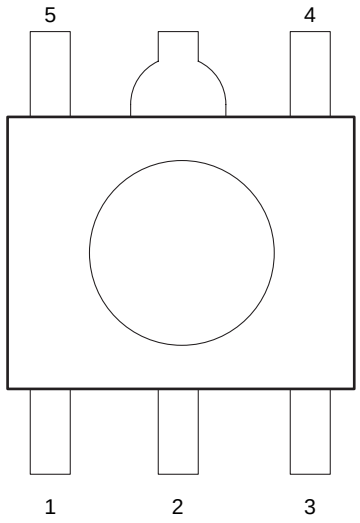

1 : CONTROL (Active High)
2 : GND
3 : NOISE BYPASS
4 : VOUT
5 : VIN

● Block Diagram

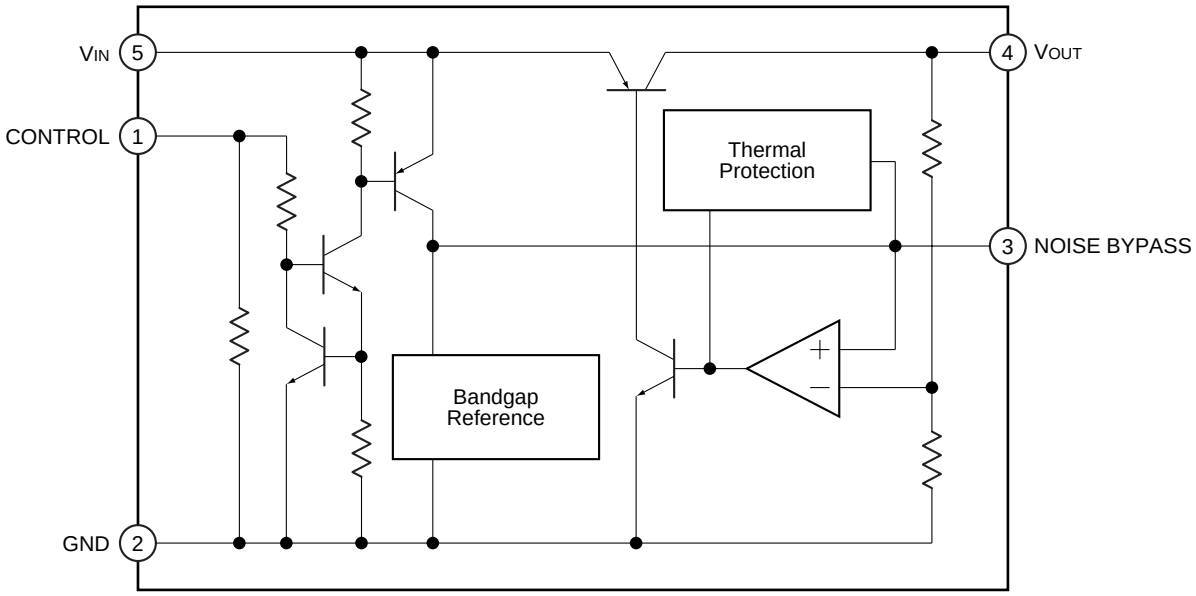

M65672WG-C (MAIN ASSY : IC1001)

• Signal Processing IC for DVD Recorder

● Pin Arrangement (Top view)

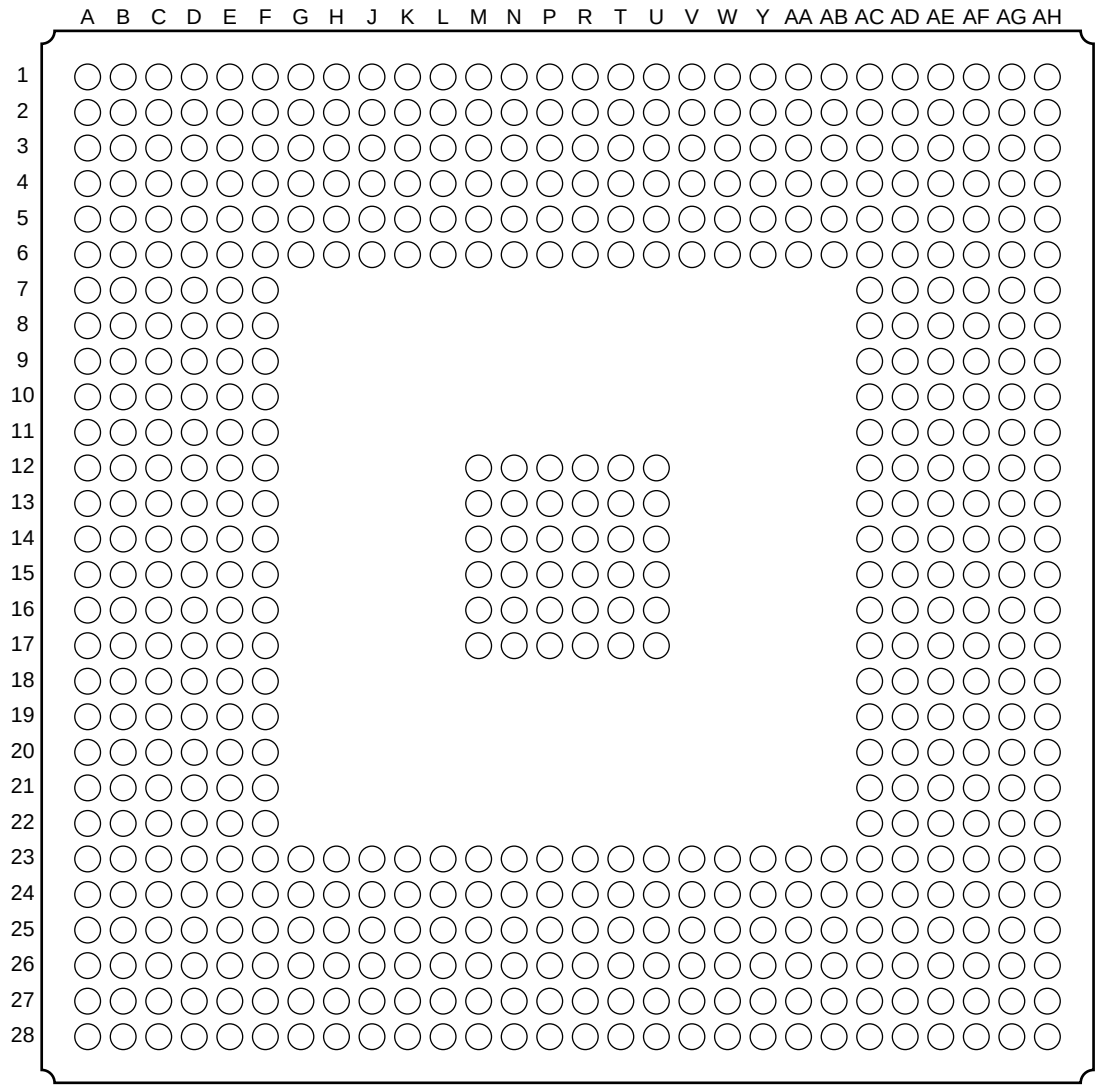

● I/O buffer list

Buffer Name	Main Function	Remarks
PDIDGZ	Input buffer (5V tolerant)	
PDUDGZ	Input buffer (5V tolerant), pull-up	
PDDDGZ	Input buffer (5V tolerant), pull-down	
PDO04CDG	Output buffer, 4mA	
PDO08CDG	Output buffer, 8mA	
PDO0204DGZ	Output buffer, 2/4mA	
PDO0406DSGZ	Output buffer, 4/6mA	For SDRAM IF
PDO0406DSGZ×2	Output buffer, 8/12mA	For SDRAM IF
PDT0204DGZ	3 state output buffer, 2/4mA	
PDB04DGZ	Bidirectional buffer, 4mA	
PDB08DGZ	Bidirectional buffer, 8mA	
PDB0204DGZ	Bidirectional buffer, 2/4mA	
PDB0406DSGZ	Bidirectional buffer, 4/6mA	For SDRAM IF

● Pin Name list

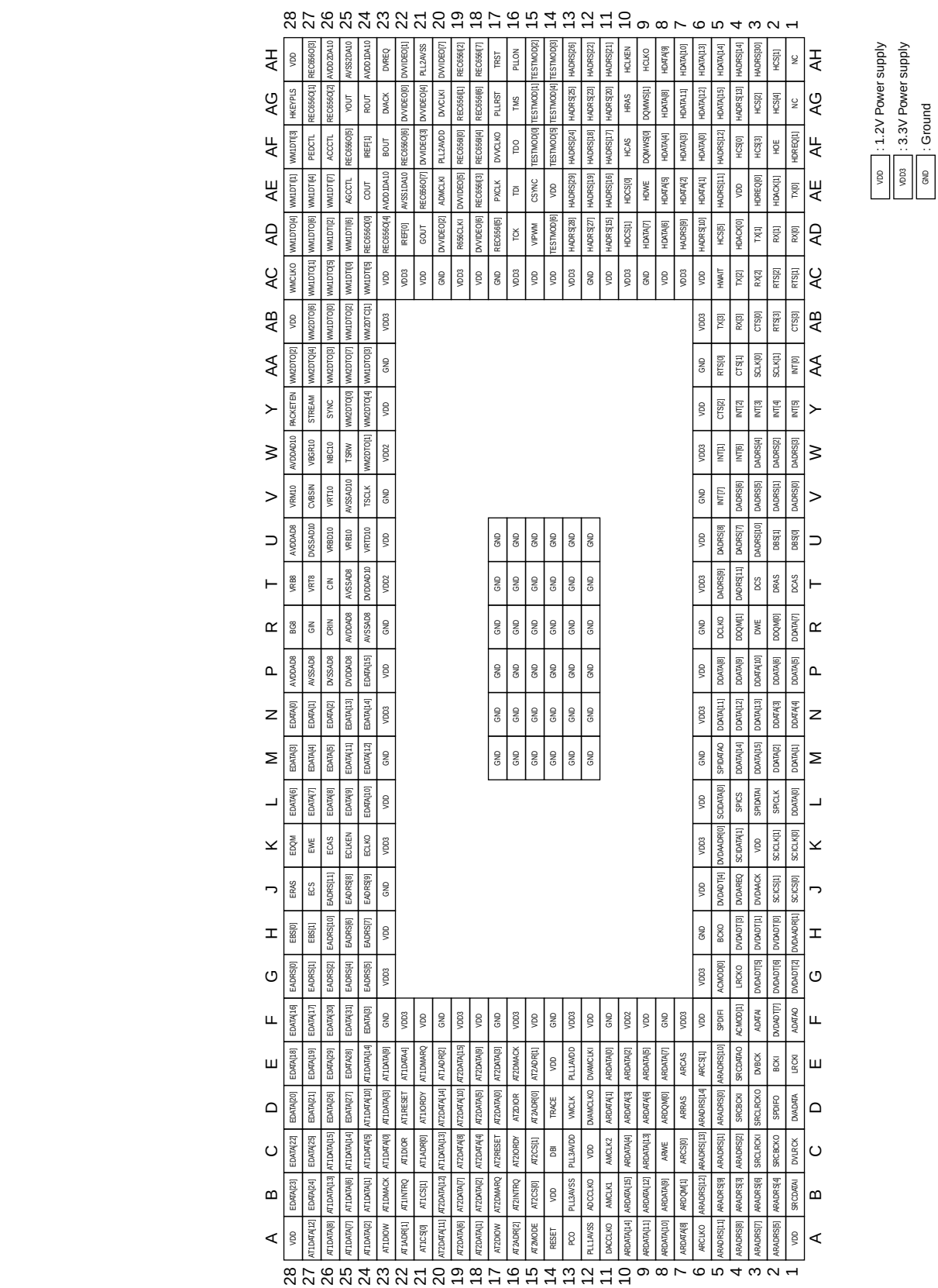

● Pin Function

No.	BALL Address	Pin Name	I/O	Function	No.	BALL Address	Pin Name	I/O	Function
1	VDD3	VDD3	–	3.3V I/O power supply	56	V26	VRT10	–	VIDEO-Analog
2	GND	GND	–	Ground	57	V28	VRM10	–	VIDEO-Analog
3	VDD	VDD	–	1.2V LOGIC power supply	58	U25	VRB10	–	VIDEO-Analog
4	AH28	VDD	–	1.2V LOGIC power supply	59	U26	VRBD10	–	VIDEO-Analog
5	AF26	ACCCTL	O		60	U27	DVSSAD10	–	
6	AF27	PEDCTL	O	VIDEO-Analog, Output buffer	61	T24	DVDDAD10	–	
7	AG28	HKEYPLS	O	VIDEO-Analog, Output buffer	62	GND	GND	–	Ground
8	GND	GND	–	Ground	63	VDD	VDD	–	1.2V LOGIC power supply
9	AE26	WM1DTI[7]	I/O	WM/VWM, Bidirectional buffer	64	U28	AVDDAD8	–	
10	AD25	WM1DTI[6]	I/O	WM/VWM, Bidirectional buffer	65	T25	AVSSAD8	–	
11	AC24	WM1DTI[5]	I/O	WM/VWM, Bidirectional buffer	66	T26	CIN	I	VIDEO-Analog
12	AE27	WM1DTI[4]	I/O	WM/VWM, Bidirectional buffer	67	T27	VRT8	–	VIDEO-Analog
13	AF28	WM1DTI[3]	I/O	WM/VWM, Bidirectional buffer	68	T28	VRB8	–	VIDEO-Analog
14	AD26	WM1DTI[2]	I/O	WM/VWM, Bidirectional buffer	69	R25	AVDDAD8	–	
15	AE28	WM1DTI[1]	I/O	WM/VWM, Bidirectional buffer	70	R24	AVSSAD8	–	
16	AC25	WM1DTI[0]	I/O	WM/VWM, Bidirectional buffer	71	R26	CRIN	I	VIDEO-Analog
17	AB24	WM1DTO[7]	I/O	WM/VWM, Bidirectional buffer	72	R28	BG8	–	VIDEO-Analog
18	VDD	VDD	–	1.2V LOGIC power supply	73	P28	AVDDAD8	–	
19	GND	GND	–	Ground	74	P27	AVSSAD8	–	
20	AD27	WM1DTO[6]	I/O	WM/VWM, Bidirectional buffer	75	R27	GIN	I	VIDEO-Analog
21	AC26	WM1DTO[5]	I/O	WM/VWM, Bidirectional buffer	76	P26	DVSSAD8	–	
22	AD28	WM1DTO[4]	I/O	WM/VWM, Bidirectional buffer	77	P25	DVDDAD8	–	
23	AA24	WM1DTO[3]	I/O	WM/VWM, Bidirectional buffer	78	GND	GND	–	Ground
24	AB25	WM1DTO[2]	I/O	WM/VWM, Bidirectional buffer	79	P24	EDATA[15]	I/O	SDRAM ENC, Bidirectional buffer
25	VDD	VDD	–	1.2V LOGIC power supply	80	VDD3	VDD3	–	3.3V I/O power supply
26	AC27	WM1DTO[1]	I/O	WM/VWM, Bidirectional buffer	81	N28	EDATA[0]	I/O	SDRAM ENC, Bidirectional buffer
27	GND	GND	–	Ground	82	N27	EDATA[1]	I/O	SDRAM ENC, Bidirectional buffer
28	AC28	WMCLKO	O	WM/VWM, Output buffer	83	N26	EDATA[2]	I/O	SDRAM ENC, Bidirectional buffer
29	VDD3	VDD3	–	3.3V I/O power supply	84	VDD	VDD	–	1.2V LOGIC power supply
30	AB26	WM1DTO[0]	I/O	WM/VWM, Bidirectional buffer	85	N25	EDATA[13]	I/O	SDRAM ENC, Bidirectional buffer
31	AA25	WM2DTO[7]	O	WM/VWM, Output buffer	86	GND	GND	–	Ground
32	AB27	WM2DTO[6]	O	WM/VWM, Output buffer	87	M28	EDATA[3]	I/O	SDRAM ENC, Bidirectional buffer
33	AB28	VDD	–	1.2V LOGIC power supply	88	GND	GND	–	Ground
34	Y24	WM2DTO[5]	O	WM/VWM, Output buffer	89	N24	EDATA[14]	I/O	SDRAM ENC, Bidirectional buffer
35	AA27	WM2DTO[4]	O	WM/VWM, Output buffer	90	M27	EDATA[4]	I/O	SDRAM ENC, Bidirectional buffer
36	AA26	WM2DTO[3]	O	WM/VWM, Output buffer	91	M26	EDATA[5]	I/O	SDRAM ENC, Bidirectional buffer
37	AA28	WM2DTO[2]	O	WM/VWM, Output buffer	92	VDD3	VDD3	–	3.3V I/O power supply
38	W24	WM2DTO[1]	O	WM/VWM, Output buffer	93	M25	EDATA[11]	I/O	SDRAM ENC, Bidirectional buffer
39	GND	GND	–	Ground	94	L28	EDATA[6]	I/O	SDRAM ENC, Bidirectional buffer
40	Y25	WM2DTO[0]	O	WM/VWM, Output buffer	95	L27	EDATA[7]	I/O	SDRAM ENC, Bidirectional buffer
41	GND	GND	–	Ground	96	VDD	VDD	–	1.2V LOGIC power supply
42	Y26	SYNC	I/O	TS OUT, Bidirectional buffer	97	M24	EDATA[12]	I/O	SDRAM ENC, Bidirectional buffer
43	Y27	STREAM	I/O	TS OUT,Bidirectional buffer	98	GND	GND	–	Ground
44	Y28	PACKETEN	I/O	TS OUT,Bidirectional buffer	99	L26	EDATA[8]	I/O	SDRAM ENC, Bidirectional buffer
45	VDD3	VDD3	–	3.3V IO power supply	100	GND	GND	–	Ground
46	W25	TSRW	O	TS OUT,Output buffer	101	L25	EDATA[9]	I/O	SDRAM ENC, Bidirectional buffer
47	GND	GND	–	Ground	102	K28	EDQM	O	SDRAM ENC, Output buffer
48	V24	TSCLK	O	TS OUT,Output buffer	103	K27	EWE	O	SDRAM ENC, Output buffer
49	VDD3	VDD3	–	3.3V I/O power supply	104	VDD3	VDD3	–	3.3V I/O power supply
50	W26	NBC10	–	VIDEO-Analog	105	K26	ECAS	O	SDRAM ENC, Output buffer
51	W27	VBGR10	–	VIDEO-Analog	106	L24	EDATA[10]	I/O	SDRAM ENC, Bidirectional buffer
52	W28	AVDDAD10	–		107	K25	ECLKEN	O	Output buffer, 4/6mA
53	V25	AVSSAD10	–		108	VDD	VDD	–	1.2V LOGIC power supply
54	V27	CVBSIN	I	VIDEO-Analog	109	J28	ERAS	O	SDRAM ENC, Output buffer
55	U24	VRTD10	–	VIDEO-Analog	110	GND	GND	–	Ground

No.	BALL Address	Pin Name	I/O	Function	No.	BALL Address	Pin Name	I/O	Function
111	J27	ECS	O	SDRAM ENC, Output buffer	166	VDD3	VDD3	–	3.3V I/O power supply
112	GND	GND	–	Ground	167	C25	AT1DATA[11]	I/O	ATAPI-DVD, Bidirectional buffer
113	J26	EADRS[11]	O	SDRAM ENC, Output buffer	168	D24	AT1DATA[10]	I/O	ATAPI-DVD, Bidirectional buffer
114	J25	EADRS[8]	O	SDRAM ENC, Output buffer	169	E23	AT1DATA[9]	I/O	ATAPI-DVD, Bidirectional buffer
115	GND	GND	–	Ground	170	GND	GND	–	Ground
116	K24	ECLKO	O	SDRAM ENC, Output buffer	171	A26	AT1DATA[8]	I/O	ATAPI-DVD, Bidirectional buffer
117	VDD3	VDD3	–	3.3V I/O power supply	172	A25	AT1DATA[7]	I/O	ATAPI-DVD, Bidirectional buffer
118	H28	EBS[0]	O	SDRAM ENC, Output buffer	173	B25	AT1DATA[6]	I/O	ATAPI-DVD, Bidirectional buffer
119	H27	EBS[1]	O	SDRAM ENC, Output buffer	174	GND	GND	–	Ground
120	H26	EADRS[10]	O	SDRAM ENC, Output buffer	175	C24	AT1DATA[5]	I/O	ATAPI-DVD, Bidirectional buffer
121	VDD	VDD	–	1.2V LOGIC power supply	176	VDD3	VDD3	–	3.3V I/O power supply
122	G28	EADRS[0]	O	SDRAM ENC, Output buffer	177	E22	AT1DATA[4]	I/O	ATAPI-DVD, Bidirectional buffer
123	GND	GND	–	Ground	178	VDD	VDD	–	1.2V LOGIC power supply
124	J24	EADRS[9]	O	SDRAM ENC, Output buffer	179	D23	AT1DATA[3]	I/O	ATAPI-DVD, Bidirectional buffer
125	GND	GND	–	Ground	180	A24	AT1DATA[2]	I/O	ATAPI-DVD, Bidirectional buffer
126	G27	EADRS[1]	O	SDRAM ENC, Output buffer	181	B24	AT1DATA[1]	I/O	ATAPI-DVD, Bidirectional buffer
127	H25	EADRS[6]	O	SDRAM ENC, Output buffer	182	GND	GND	–	Ground
128	G26	EADRS[2]	O	SDRAM ENC, Output buffer	183	C23	AT1DATA[0]	I/O	ATAPI-DVD, Bidirectional buffer
129	VDD3	VDD3	–	3.3V I/O power supply	184	D22	AT1RESET	O	Output buffer,8mA
130	F27	EDATA[17]	I/O	SDRAM ENC, Bidirectional buffer	185	E21	AT1DMARQ	I	ATAPI-DVD, Input buffer
131	F28	EDATA[16]	I/O	SDRAM ENC, Bidirectional buffer	186	GND	GND	–	Ground
132	H24	EADRS[7]	O	SDRAM ENC, Output buffer	187	B23	AT1DMACK	O	ATAPI-DVD, Output buffer
133	VDD	VDD	–	1.2V LOGIC power supply	188	VDD3	VDD3	–	3.3V I/O power supply
134	G25	EADRS[4]	O	SDRAM ENC, Output buffer	189	A23	AT1DIOW	O	ATAPI-DVD, Output buffer
135	GND	GND	–	Ground	190	VDD	VDD	–	1.2V LOGIC power supply
136	F26	EDATA[30]	I/O	SDRAM ENC, Bidirectional buffer	191	C22	AT1DIOR	O	ATAPI-DVD, Output buffer
137	GND	GND	–	Ground	192	D21	AT1IORDY	I	ATAPI-DVD, Input buffer
138	E27	EDATA[19]	I/O	SDRAM ENC, Bidirectional buffer	193	B22	AT1INTRQ	I	ATAPI-DVD, Input buffer
139	E28	EDATA[18]	I/O	SDRAM ENC, Bidirectional buffer	194	GND	GND	–	Ground
140	F25	EDATA[31]	I/O	SDRAM ENC, Bidirectional buffer	195	E20	AT1ADR[2]	O	ATAPI-DVD, Output buffer
141	VDD3	VDD3	–	3.3V I/O power supply	196	A22	AT1ADR[1]	O	ATAPI-DVD, Output buffer
142	E26	EDATA[29]	I/O	SDRAM ENC, Bidirectional buffer	197	C21	AT1ADR[0]	O	ATAPI-DVD, Output buffer
143	G24	EADRS[5]	O	SDRAM ENC, Output buffer	198	GND	GND	–	Ground
144	D28	EDATA[20]	I/O	SDRAM ENC, Bidirectional buffer	199	B21	AT1CS[1]	O	ATAPI-DVD, Output buffer
145	VDD	VDD	–	1.2V LOGIC power supply	200	VDD3	VDD3	–	3.3V I/O power supply
146	D27	EDATA[21]	I/O	SDRAM ENC, Bidirectional buffer	201	A21	AT1CS[0]	O	ATAPI-DVD, Output buffer
147	GND	GND	–	Ground	202	VDD	VDD	–	1.2V LOGIC power supply
148	C28	EDATA[22]	I/O	SDRAM ENC, Bidirectional buffer	203	E19	AT2DATA[15]	I/O	ATAPI-HDD, Bidirectional buffer
149	GND	GND	–	Ground	204	D20	AT2DATA[14]	I/O	ATAPI-HDD, Bidirectional buffer
150	F24	EADRS[3]	O	SDRAM ENC, Output buffer	205	C20	AT2DATA[13]	I/O	ATAPI-HDD, Bidirectional buffer
151	E25	EDATA[28]	I/O	SDRAM ENC, Bidirectional buffer	206	GND	GND	–	Ground
152	D26	EDATA[26]	I/O	SDRAM ENC, Bidirectional buffer	207	B20	AT2DATA[12]	I/O	ATAPI-HDD, Bidirectional buffer
153	VDD3	VDD3	–	3.3V I/O power supply	208	A20	AT2DATA[11]	I/O	ATAPI-HDD, Bidirectional buffer
154	B28	EDATA[23]	I/O	SDRAM ENC, Bidirectional buffer	209	D19	AT2DATA[10]	I/O	ATAPI-HDD, Bidirectional buffer
155	C27	EDATA[25]	I/O	SDRAM ENC, Bidirectional buffer	210	GND	GND	–	Ground
156	B27	EDATA24]	I/O	SDRAM ENC, Bidirectional buffer	211	E18	AT2DATA[9]	I/O	ATAPI-HDD, idirectional buffer
157	VDD	VDD	–	1.2V LOGIC power supply	212	VDD3	VDD3	–	3.3V I/O power supply
158	D25	EDATA[27]	I/O	SDRAM ENC, Bidirectional buffer	213	C19	AT2DATA[8]	I/O	ATAPI-HDD, Bidirectional buffer
159	GND	GND	–	Ground	214	VDD	VDD	–	1.2V LOGIC power supply
160	C26	AT1DATA[15]	I/O	ATAPI-DVD, Bidirectional buffer	215	B19	AT2DATA[7]	I/O	ATAPI-HDD, Bidirectional buffer
161	E24	AT1DATA[14]	I/O	ATAPI-DVD, Bidirectional buffer	216	A19	AT2DATA[6]	I/O	ATAPI-HDD, Bidirectional buffer
162	GND	GND	–	Ground	217	D18	AT2DATA[5]	I/O	ATAPI-HDD, Bidirectional buffer
163	A28	VDD	–	1.2V LOGIC power supply	218	GND	GND	–	Ground
164	B26	AT1DATA[13]	I/O	ATAPI-DVD, Bidirectional buffer	219	C18	AT2DATA[4]	I/O	ATAPI-HDD, Bidirectional buffer
165	A27	AT1DATA[12]	I/O	ATAPI-DVD, Bidirectional buffer	220	E17	AT2DATA[3]	I/O	ATAPI-HDD, Bidirectional buffer

No.	BALL Address	Pin Name	I/O	Function	No.	BALL Address	Pin Name	I/O	Function
221	B18	AT2DATA[2]	I/O	ATAPI-HDD, Bidirectional buffer	276	VDD3	VDD3	–	3.3V I/O power supply
222	GND	GND	–	Ground	277	C11	AMCLK2	I	CLOCK, Input buffer
223	A18	AT2DATA[1]	I/O	ATAPI-HDD, Bidirectional buffer	278	GND	GND	–	Ground
224	VDD3	VDD3	–	3.3V I/O power supply	279	D11	ARDATA[1]	I/O	SDRAM-ATAPI, Bidirectional buffer
225	D17	AT2DATA[0]	I/O	ATAPI-HDD, Bidirectional buffer	280	VDD3	VDD3	–	3.3V I/O power supply
226	VDD	VDD	–	1.2V LOGIC power supply	281	A10	ARDATA[14]	I/O	SDRAM-ATAPI, Bidirectional buffer
227	C17	AT2RESET	I/O	ATAPI-HDD, Bidirectional buffer	282	VDD	VDD	–	1.2V LOGIC power supply
228	B17	AT2DMARQ	I	ATAPI-HDD, Input buffer	283	B10	ARDATA[15]	I/O	SDRAM-ATAPI, Bidirectional buffer
229	E16	AT2DMACK	O	ATAPI-HDD, Output buffer	284	E11	ARDATA[0]	I/O	SDRAM-ATAPI, Bidirectional buffer
230	GND	GND	–	Ground	285	C10	ARDATA[4]	I/O	SDRAM-ATAPI, Bidirectional buffer
231	A17	AT2DIOW	O	ATAPI-HDD, Output buffer	286	GND	GND	–	Ground
232	D16	AT2DIOR	O	ATAPI-HDD, Output buffer	287	D10	ARDATA[3]	I/O	SDRAM-ATAPI, Bidirectional buffer
233	C16	AT2IORDY	I	ATAPI-HDD, Input buffer	288	A9	ARDATA[11]	I/O	SDRAM-ATAPI, Bidirectional buffer
234	GND	GND	–	Ground	289	B9	ARDATA[12]	I/O	SDRAM-ATAPI, Bidirectional buffer
235	B16	AT2INTRQ	I	ATAPI-HDD, Input buffer	290	GND	GND	–	Ground
236	VDD3	VDD3	–	3.3V I/O power supply	291	C9	ARDATA[13]	I/O	SDRAM-ATAPI, Bidirectional buffer
237	A16	AT2ADR[2]	I/O	ATAPI-HDD, Bidirectional buffer	292	E10	ARDATA[2]	I/O	SDRAM-ATAPI, Bidirectional buffer
238	VDD	VDD	–	1.2V LOGIC power supply	293	D9	ARDATA[6]	I/O	SDRAM-ATAPI, Bidirectional buffer
239	E15	AT2ADR[1]	I/O	ATAPI-HDD, Bidirectional buffer	294	VDD3	VDD3	–	3.3V I/O power supply
240	GND	GND	–	Ground	295	A8	ARDATA[10]	I/O	SDRAM-ATAPI, Bidirectional buffer
241	D15	AT2ADR[0]	I/O	ATAPI-HDD, Bidirectional buffer	296	B8	ARDATA[9]	I/O	SDRAM-ATAPI, Bidirectional buffer
242	VDD	VDD	–	1.2V LOGIC power supply	297	C8	ARWE	O	SDRAM-ATAPI, Output buffer
243	C15	AT2CS[1]	O	ATAPI-HDD, Output buffer	298	VDD	VDD	–	1.2V LOGIC power supply
244	GND	GND	–	Ground	299	A7	ARDATA[8]	I/O	SDRAM-ATAPI, Bidirectional buffer
245	B15	AT2CS[0]	O	ATAPI-HDD, Output buffer	300	E9	ARDATA[5]	I/O	SDRAM-ATAPI, Bidirectional buffer
246	VDD	VDD	–	1.2V LOGIC power supply	301	D8	ARDQM[0]	O	SDRAM-ATAPI, Output buffer
247	A15	AT2MODE	I	ATAPI-HDD, Input buffer	302	GND	GND	–	Ground
248	GND	GND	–	Ground	303	B7	ARDQM[1]	O	SDRAM-ATAPI, Output buffer
249	GND	GND	–	Ground	304	C7	ARCS[0]	O	SDRAM-ATAPI, Output buffer
250	A14	RESET	I	Input buffer (5V tolerant)	305	VDD3	VDD3	–	3.3V I/O power supply
251	VDD3	VDD3	–	3.3V I/O power supply	306	A6	ARCLKO	O	SDRAM-ATAPI, Output buffer
252	B14	VDD	–	1.2V LOGIC power supply	307	GND	GND	–	Ground
253	C14	DBI	I	TEST, Input buffer	308	B6	ARADRS[12]	O	SDRAM-ATAPI, Output buffer
254	GND	GND	–	Ground	309	E8	ARDATA[7]	I/O	SDRAM-ATAPI, Bidirectional buffer
255	D14	TRACE	I	TEST, Input buffer	310	D7	ARRAS	O	SDRAM-ATAPI, Output buffer
256	E14	VDD	–	1.2V LOGIC power supply	311	VDD3	VDD3	–	3.3V I/O power supply
257	A13	PCO	O	CLOCK, 3 state output buffer	312	A5	ARADRS[11]	O	SDRAM-ATAPI, Output buffer
258	GND	GND	–	Ground	313	C6	ARADRS[13]	O	SDRAM-ATAPI, Output buffer
259	B13	PLL3AVSS	–		314	B5	ARADRS[9]	O	SDRAM-ATAPI, Output buffer
260	C13	PLL3AVDD	–		315	VDD	VDD	–	1.2V LOGIC power supply
261	D13	VMCLK	I	CLOCK, Input buffer	316	E7	ARCAS	O	SDRAM-ATAPI, Output buffer
262	E13	PLL1AVDD	–		317	D6	ARADRS[14]	O	SDRAM-ATAPI, Output buffer
263	A12	PLL1AVSS	–		318	C5	ARADRS[1]	O	SDRAM-ATAPI, Output buffer
264	VDD3	VDD3	–	3.3V I/O power supply	319	GND	GND	–	Ground
265	B12	ADCCLKO	O	CLOCK, Output buffer	320	B4	ARADRS[3]	O	SDRAM-ATAPI, Output buffer
266	GND	GND	–	Ground	321	A4	ARADRS[8]	O	SDRAM-ATAPI, Output buffer
267	C12	VDD	–	1.2V LOGIC power supply	322	A3	ARADRS[7]	O	SDRAM-ATAPI, Output buffer
268	VDD3	VDD3	–	3.3V I/O power supply	323	GND	GND	–	Ground
269	D12	DVAMCLKO	O	CLOCK, Output buffer	324	E6	ARCS[1]	O	SDRAM-ATAPI, Output buffer
270	GND	GND	–	Ground	325	D5	ARADRS[0]	O	SDRAM-ATAPI, Output buffer
271	A11	DACCLKO	O	CLOCK, Output buffer	326	C4	ARADRS[2]	O	SDRAM-ATAPI, Output buffer
272	VDD3	VDD3	–	3.3V I/O power supply	327	VDD3	VDD3	–	3.3V I/O power supply
273	E12	DVAMCLKI	I	AUDIO CLOCK, Input buffer	328	A2	ARADRS[5]	O	SDRAM-ATAPI, Output buffer
274	GND	GND	–	Ground	329	B3	ARADRS[6]	O	SDRAM-ATAPI, Output buffer
275	B11	AMCLK1	I	CLOCK, Input buffer	330	B2	ARADRS[4]	O	SDRAM-ATAPI, Output buffer

No.	BALL Address	Pin Name	I/O	Function	No.	BALL Address	Pin Name	I/O	Function
331	GND	GND	–	Ground	386	VDD	VDD	–	1.2V LOGIC power supply
332	E5	ARADRS[10]	O	SDRAM-ATAPI, Output buffer	387	GND	GND	–	Ground
333	D4	SRCBCKI	I	AUDIO, Input buffer	388	L3	SPIDATAI	I/O	HOST, Bidirectional buffer
334	VDD3	VDD3	–	3.3V I/O power supply	389	VDD	VDD	–	1.2V LOGIC power supply
335	C3	SRCLRCKI	I	AUDIO, Input buffer	390	M5	SPIDATAO	I/O	HOST, Bidirectional buffer
336	B1	SRCDATAI	I	AUDIO, Input buffer	391	GND	GND	–	Ground
337	A1	VDD	–	1.2V LOGIC power supply	392	L2	SPICLK	I/O	HOST, Bidirectional buffer
338	GND	GND	–	Ground	393	GND	GND	–	Ground
339	C2	SRCBCKO	O	AUDIO, Output buffer	394	L1	DDATA[0]	I/O	SDRAM-DEC, Bidirectional buffer
340	VDD	VDD	–	1.2V LOGIC power supply	395	VDD3	VDD3	–	3.3V I/O power supply
341	D3	SRCLRCKO	O	AUDIO, Output buffer	396	M4	DDATA[14]	I/O	SDRAM-DEC, Bidirectional buffer
342	E4	SRCDATAO	O	AUDIO, Output buffer	397	M3	DDATA[15]	I/O	SDRAM-DEC, Bidirectional buffer
343	F5	SPDIFI	I	AUDIO, Input buffer	398	M2	DDATA[2]	I/O	SDRAM-DEC, Bidirectional buffer
344	D2	SPDIFO	O	AUDIO, Output buffer	399	VDD	VDD	–	1.2V LOGIC power supply
345	C1	DVLRCK	I/O	AUDIO, Bidirectional buffer	400	N5	DDATA[11]	I/O	SDRAM-DEC, Bidirectional buffer
346	E3	DVBCK	I/O	AUDIO, Bidirectional buffer	401	GND	GND	–	Ground
347	D1	DVADATA	I/O	AUDIO, Bidirectional buffer	402	M1	DDATA[1]	I/O	SDRAM-DEC, Bidirectional buffer
348	F4	ACMOD[1]	I	AUDIO, Input buffer	403	GND	GND	–	Ground
349	G5	ACMOD[0]	I	AUDIO, Input buffer	404	N4	DDATA[12]	I/O	SDRAM-DEC, Bidirectional buffer
350	E1	LRCKI	I	AUDIO, Input buffer	405	N3	DDATA[13]	I/O	SDRAM-DEC, Bidirectional buffer
351	E2	BCKI	I	AUDIO, Input buffer	406	N2	DDATA[3]	I/O	SDRAM-DEC, Bidirectional buffer
352	GND	GND	–	Ground	407	VDD3	VDD3	–	3.3V I/O power supply
353	F3	ADATAI	I	AUDIO, Input buffer	408	N1	DDATA[4]	I/O	SDRAM-DEC, Bidirectional buffer
354	GND	GND	–	Ground	409	P5	DDATA[8]	I/O	SDRAM-DEC, Bidirectional buffer
355	G4	LRCKO	O	AUDIO, Output buffer	410	P4	DDATA[9]	I/O	SDRAM-DEC, Bidirectional buffer
356	VDD	VDD	–	1.2V LOGIC power supply	411	VDD	VDD	–	1.2V LOGIC power supply
357	H5	BCKO	O	AUDIO, Output buffer	412	P3	DDATA[10]	I/O	SDRAM-DEC, Bidirectional buffer
358	F1	ADATAO	O	DVD-AUDIO, Output buffer	413	GND	GND	–	Ground
359	F2	DVDADT[7]	O	DVD-AUDIO, Output buffer	414	P2	DDATA[6]	I/O	SDRAM-DEC, Bidirectional buffer
360	G2	DVDADT[6]	O	DVD-AUDIO, Output buffer	415	GND	GND	–	Ground
361	G3	DVDADT[5]	O	DVD-AUDIO, Output buffer	416	P1	DDATA[5]	I/O	SDRAM-DEC, Bidirectional buffer
362	J5	DVDADT[4]	O	DVD-AUDIO, Output buffer	417	R1	DDATA[7]	I/O	SDRAM-DEC, Bidirectional buffer
363	H4	DVDADT[3]	O	DVD-AUDIO, Output buffer	418	R2	DDQM[0]	O	SDRAM-DEC, Output buffer
364	G1	DVDADT[2]	O	DVD-AUDIO, Output buffer	419	VDD3	VDD3	–	3.3V I/O power supply
365	H3	DVDADT[1]	O	DVD-AUDIO, Output buffer	420	R3	DWE	O	SDRAM-DEC, Output buffer
366	H2	DVDADT[0]	O	DVD-AUDIO, Output buffer	421	VDD	VDD	–	1.2V LOGIC power supply
367	H1	DVDAADR[1]	O	DVD-AUDIO, Output buffer	422	R4	DDQM[1]	O	SDRAM-DEC, Output buffer
368	K5	DVDAADR[0]	O	DVD-AUDIO, Output buffer	423	GND	GND	–	Ground
369	J4	DVDAREQ	I/O	DVD-AUDIO, Bidirectional buffer	424	R5	DCLKO	O	SDRAM-DEC, Output buffer
370	GND	GND	–	Ground	425	VDD3	VDD3	–	3.3V I/O power supply
371	J3	DVDAACK	O	DVD-AUDIO, Output buffer	426	VDD	VDD	–	1.2V LOGIC power supply
372	VDD	VDD	–	1.2V LOGIC power supply	427	T1	DCAS	O	SDRAM-DEC, Output buffer
373	J2	SCICS[1]	I/O	HOST, Bidirectional buffer	428	GND	GND	–	Ground
374	VDD3	VDD3	–	3.3V I/O power supply	429	T2	DRAS	–	SDRAM-DEC, Output buffer
375	J1	SCICS[0]	I/O	HOST, Bidirectional buffer	430	GND	GND	–	Ground
376	VDD	VDD	–	1.2V LOGIC power supply	431	T3	DCS	O	SDRAM-DEC, Output buffer
377	K4	SCIDATA[1]	I/O	HOST, Bidirectional buffer	432	T4	DADRS[11]	O	SDRAM-DEC, Output buffer
378	GND	GND	–	Ground	433	U1	DBS[0]	O	SDRAM-DEC, Output buffer
379	L5	SCIDATA[0]	I/O	HOST, Bidirectional buffer	434	VDD3	VDD3	–	3.3V I/O power supply
380	K3	VDD	–	1.2V LOGIC power supply	435	T5	DADRS[9]	O	SDRAM-DEC, Output buffer
381	K2	SCICLK[1]	I/O	HOST, Bidirectional buffer	436	U2	DBS[1]	O	SDRAM-DEC, Output buffer
382	GND	GND	–	Ground	437	U3	DADRS[10]	O	SDRAM-DEC, Output buffer
383	K1	SCICLK[0]	I/O	HOST, Bidirectional buffer	438	VDD	VDD	–	1.2V LOGIC power supply
384	GND	GND	–	Ground	439	U4	DADRS[7]	O	SDRAM-DEC, Output buffer
385	L4	SPICS	I/O	HOST, Bidirectional buffer	440	GND	GND	–	Ground

No.	BALL Address	Pin Name	I/O	Function	No.	BALL Address	Pin Name	I/O	Function
441	V1	DADRS[0]	O	SDRAM-DEC, Output buffer	496	VDD	VDD	–	1.2V LOGIC power supply
442	GND	GND	–	Ground	497	AD4	HDACK[0]	O	Output buffer, 4mA
443	V2	DADRS[1]	O	SDRAM-DEC, Output buffer	498	AF1	HDREQ[1]	I	HOST, Input buffer
444	VDD	VDD	–	1.2V LOGIC power supply	499	AE3	HDREQ[0]	I	HOST, Input buffer
445	U5	DADRS[8]	O	SDRAM-DEC, Output buffer	500	AC5	HWAIT	I	HOST, Input buffer
446	GND	GND	–	Ground	501	AF2	HOE	O	HOST, Output buffer
447	V3	DADRS[5]	O	SDRAM-DEC, Output buffer	502	VDD3	VDD3	–	3.3V I/O power supply
448	VDD3	VDD3	–	3.3V I/O power supply	503	GND	GND	–	Ground
449	V4	DADRS[6]	O	SDRAM-DEC, Output buffer	504	AE4	VDD	–	1.2V LOGIC power supply
450	W1	DADRS[3]	O	SDRAM-DEC, Output buffer	505	AD5	HCS[5]	O	HOST, Output buffer
451	W2	DADRS[2]	O	SDRAM-DEC, Output buffer	506	AG2	HCS[4]	O	HOST, Output buffer
452	VDD	VDD	–	1.2V LOGIC power supply	507	AF3	HCS[3]	O	HOST, Output buffer
453	W3	DADRS[4]	O	SDRAM-DEC, Output buffer	508	AG3	HCS[2]	O	HOST, Output buffer
454	GND	GND	–	Ground	509	AH2	HCS[1]	O	HOST, Output buffer
455	GND	GND	–	Ground	510	GND	GND	–	Ground
456	GND	GND	–	Ground	511	AF4	HCS[0]	O	HOST, Output buffer
457	V5	INT[7]	I/O	HOST, Bidirectional buffer	512	VDD	VDD	–	1.2V LOGIC power supply
458	VDD	VDD	–	1.2V LOGIC power supply	513	AD6	HADRS[10]	I/O	HOST, Bidirectional buffer
459	W4	INT[6]	I/O	HOST, Bidirectional buffer	514	GND	GND	–	Ground
460	Y1	INT[5]	I/O	HOST, Bidirectional buffer	515	AE5	HADRS[11]	I/O	HOST, Bidirectional buffer
461	Y2	INT[4]	I/O	HOST, Bidirectional buffer	516	AG4	HADRS[13]	I/O	HOST, Bidirectional buffer
462	VDD3	VDD3	–	3.3V I/O power supply	517	AH3	HADRS[30]	I/O	HOST, Bidirectional buffer
463	Y3	INT[3]	I/O	HOST, Bidirectional buffer	518	VDD3	VDD3	–	3.3V I/O power supply
464	GND	GND	–	Ground	519	AF5	HADRS[12]	I/O	HOST, Bidirectional buffer
465	Y4	INT[2]	I/O	HOST, Bidirectional buffer	520	GND	GND	–	Ground
466	VDD	VDD	–	1.2V LOGIC power supply	521	AH4	HADRS[14]	I/O	HOST, Bidirectional buffer
467	W5	INT[1]	I/O	HOST, Bidirectional buffer	522	AE6	HDATA[1]	I/O	HOST, Bidirectional buffer
468	AA1	INT[0]	I/O	HOST, Bidirectional buffer	523	AD7	HADRS[9]	I/O	HOST, Bidirectional buffer
469	AA2	SCLK[1]	I/O	HOST, Bidirectional buffer	524	VDD3	VDD3	–	3.3V I/O power supply
470	AA3	SCLK[0]	I/O	HOST, Bidirectional buffer	525	AG5	HDATA[15]	I/O	HOST, Bidirectional buffer
471	AB1	CTS[3]	I/O	HOST, Bidirectional buffer	526	GND	GND	–	Ground
472	GND	GND	–	Ground	527	AH5	HDATA[14]	I/O	HOST, Bidirectional buffer
473	Y5	CTS[2]	I/O	HOST, Bidirectional buffer	528	GND	GND	–	Ground
474	GND	GND	–	Ground	529	AF6	HDATA[0]	I/O	HOST, Bidirectional buffer
475	AA4	CTS[1]	I/O	HOST, Bidirectional buffer	530	AD8	HDATA[6]	I/O	HOST, Bidirectional buffer
476	VDD	VDD	–	1.2V LOGIC power supply	531	AE7	HDATA[2]	I/O	HOST, Bidirectional buffer
477	AB3	CTS[0]	I/O	HOST, Bidirectional buffer	532	VDD3	VDD3	–	3.3V I/O power supply
478	AB2	RTS[3]	I/O	HOST, Bidirectional buffer	533	AG6	HDATA[12]	I/O	HOST, Bidirectional buffer
479	AC2	RTS[2]	I/O	HOST, Bidirectional buffer	534	VDD	VDD	–	1.2V LOGIC power supply
480	AC1	RTS[1]	I/O	HOST, Bidirectional buffer	535	AH6	HDATA[13]	I/O	HOST, Bidirectional buffer
481	AA5	RTS[0]	I/O	HOST, Bidirectional buffer	536	AG7	HDATA[11]	I/O	HOST, Bidirectional buffer
482	VDD3	VDD3	–	3.3V I/O power supply	537	AF7	HDATA[3]	I/O	HOST, Bidirectional buffer
483	AB4	RX[3]	I/O	HOST, Bidirectional buffer	538	GND	GND	–	Ground
484	GND	GND	–	Ground	539	AE8	HDATA[5]	I/O	HOST, Bidirectional buffer
485	AC3	RX[2]	I/O	HOST, Bidirectional buffer	540	GND	GND	–	Ground
486	VDD	VDD	–	1.2V LOGIC power supply	541	AD9	HDATA[7]	I/O	HOST, Bidirectional buffer
487	AD2	RX[1]	I/O	HOST, Bidirectional buffer	542	AF8	HDATA[4]	I/O	HOST, Bidirectional buffer
488	AD1	RX[0]	I/O	HOST, Bidirectional buffer	543	AH7	HDATA[10]	I/O	HOST, Bidirectional buffer
489	AB5	TX[3]	I/O	HOST, Bidirectional buffer	544	VDD3	VDD3	–	3.3V I/O power supply
490	AC4	TX[2]	I/O	HOST, Bidirectional buffer	545	AG8	HDATA[8]	I/O	HOST, Bidirectional buffer
491	AD3	TX[1]	I/O	HOST, Bidirectional buffer	546	VDD	VDD	–	1.2V LOGIC power supply
492	GND	GND	–	Ground	547	AH8	HDATA[9]	I/O	HOST, Bidirectional buffer
493	AE1	TX[0]	I/O	HOST, Bidirectional buffer	548	AE9	HDWE	O	HOST, Output buffer
494	GND	GND	–	Ground	549	AF9	DQMWS[0]	O	HOST, Output buffer
495	AE2	HDACK[1]	O	HOST, Output buffer	550	GND	GND	–	Ground

No.	BALL Address	Pin Name	I/O	Function	No.	BALL Address	Pin Name	I/O	Function
551	AD10	HDCS[1]	O	HOST, Output buffer	606	AG16	TMS	I	TEST, nput buffer
552	GND	GND	–	Ground	607	GND	GND	–	Ground
553	AG9	DQMWS[1]	O	HOST, Output buffer	608	AF16	TDO	O	TEST, Output buffer
554	VDD3	VDD3	–	3.3V I/O power supply	609	VDD	VDD	–	1.2V LOGIC power supply
555	AH9	HCLKO	O	HOST, Output buffer	610	AE16	TDI	I	TEST, Input buffer
556	GND	GND	–	Ground	611	VDD3	VDD3	–	3.3V I/O power supply
557	AE10	HDCS[0]	O	HOST, Output buffer	612	AH17	TRST	I	TEST, Input buffer
558	VDD3	VDD3	–	3.3V I/O power supply	613	GND	GND	–	Ground
559	AD11	HADRS[15]	I/O	HOST, Bidirectional buffer	614	AD16	TCK	I	TEST, Input buffer
560	VDD	VDD	–	1.2V LOGIC power supply	615	VDD3	VDD3	–	3.3V I/O power supply
561	AF10	HCAS	O	HOST, Output buffer	616	AG17	PLLRST	I	CLOCK, Input buffer
562	AG10	HRAS	O	HOST, Output buffer	617	GND	GND	–	Ground
563	AH10	HCLKEN	O	HOST, Output buffer	618	AF17	DVVCLKO	O	CLOCK, Output buffer
564	GND	GND	–	Groud	619	VDD3	VDD3	–	3.3V I/O power supply
565	AE11	HADRS[16]	I/O	HOST, Bidirectional buffer	620	AE17	PXCLK	O	CLOCK, Output buffer
566	GND	GND	–	Ground	621	GND	GND	–	Ground
567	AF11	HADRS[17]	I/O	HOST, Bidirectional buffer	622	AH18	REC656I[7]	I	VIDEO-Digital, Input buffer
568	AD12	HADRS[27]	I/O	HOST, Bidirectional buffer	623	VDD	VDD	–	1.2V LOGIC power supply
569	AG11	HADRS[20]	I/O	HOST, Bidirectional buffer	624	AG18	REC656I[6]	I	VIDEO-Digital, Input buffer
570	VDD3	VDD3	–	3.3V I/O power supply	625	GND	GND	–	Ground
571	AH11	HADRS[21]	I/O	HOST, Bidirectional buffer	626	AD17	REC656I[5]	I	VIDEO-Digital, Input buffer
572	VDD	VDD	–	1.2V LOGIC power supply	627	AF18	REC656I[4]	I	VIDEO-Digital, Input buffer
573	AE12	HADRS[19]	I/O	HOST, Bidirectional buffer	628	AE18	REC656I[3]	I	VIDEO-Digital, Input buffer
574	AF12	HADRS[18]	I/O	HOST, Bidirectional buffer	629	AH19	REC656I[2]	I	VIDEO-Digital, Input buffer
575	AG12	HADRS[23]	I/O	HOST, Bidirectional buffer	630	AG19	REC656I[1]	I	VIDEO-Digital, Input buffer
576	GND	GND	–	Ground	631	AF19	REC656I[0]	I	VIDEO-Digital, Input buffer
577	AD13	HADRS[28]	I/O	HOST, Bidirectional buffer	632	AH20	DVVIDEO[7]	I/O	VIDEO-Digital, Bidirectional buffer
578	VDD	VDD	–	1.2V LOGIC power supply	633	AD18	DVVIDEO[6]	I/O	VIDEO-Digital, Bidirectional buffer
579	AH12	HADRS[22]	I/O	HOST, Bidirectional buffer	634	AE19	DVVIDEO[5]	I/O	VIDEO-Digital, Bidirectional buffer
580	GND	GND	–	Ground	635	VDD3	VDD3	–	3.3V I/O power supply
581	AE13	HADRS[29]	I/O	HOST, Bidirectional buffer	636	AG20	DVVCLKI	I	CLOCK, Input buffer
582	VDD	VDD	–	1.2V LOGIC power supply	637	AF20	PLL2AVDD	–	
583	AF13	HADRS[24]	I/O	HOST, Bidirectional buffer	638	AH21	PLL2AVSS	–	
584	VDD3	VDD3	–	3.3V I/O power supply	639	AD19	R656CLKI	I	CLOCK, Input buffer
585	AG13	HADRS[25]	I/O	HOST, Bidirectional buffer	640	GND	GND	–	Ground
586	GND	GND	–	Ground	641	AE20	ADMCLKI	I	CLOCKI, Input buffer
587	AH13	HADRS[26]	I/O	HOST, Bidirectional buffer	642	VDD3	VDD3	–	3.3V I/O power supply
588	GND	GND	–	Ground	643	AG21	DVVIDEO[4]	I/O	VIDEO-Digital, Bidirectional buffer
589	GND	GND	–	Ground	644	AF21	DVVIDEO[3]	I/O	VIDEO-Digital, Bidirectional buffer
590	AD14	TESTMOD[6]	I	TEST, Input buffer	645	AD20	DVVIDEO[2]	I/O	VIDEO-Digital, Bidirectional buffer
591	AE14	VDD	–	1.2V LOGIC power supply	646	AH22	DVVIDEO[1]	I/O	VIDEO-Digital, Bidirectional buffer
592	AF14	TESTMOD[5]	I	TEST, Input buffer	647	AG22	DVVIDEO[0]	I/O	VIDEO-Digital, Bidirectional buffer
593	GND	GND	–	Ground	648	AE21	REC656O[7]	O	VIDEO-Digital, Output buffer
594	AG14	TESTMOD[4]	I	TEST, Input buffer	649	AF22	REC656O[6]	O	VIDEO-Digital, Output buffer
595	VDD	VDD	–	1.2V LOGIC power supply	650	VDD	VDD	–	1.2V LOGIC power supply
596	AH14	TESTMOD[3]	I	TEST, Input buffer	651	AH23	DVREQ	I	VIDEO-Digital, Input buffer
597	GND	GND	–	Ground	652	GND	GND	–	Ground
598	AH15	TESTMOD[2]	I	TEST, Input buffer	653	AG23	DVACK	O	VIDEO-Digital, Output buffer
599	VDD	VDD	–	1.2V LOGIC power supply	654	GND	GND	–	Ground
600	AG15	TESTMOD[1]	I	TEST, Input buffer	655	AE22	AVSS1DA10	–	
601	GND	GND	–	Ground	656	AD21	GOUT	O	VIDEO-Analog
602	AF15	TESTMOD[0]	I	TEST, Input buffer	657	AH24	AVDD1DA10	–	
603	AE15	CSYNC	I	CLOCK, Input buffer	658	AF23	BOUT	O	VIDEO-Analog
604	AD15	VIPWM	O	CLOCK, Output buffer	659	AE23	AVDD1DA10	–	
605	AH16	PLLON	I	TEST, Input buffer	660	AG24	ROUT	O	VIDEO-Analog

No.	BALL Address	Pin Name	I/O	Function	No.	BALL Address	Pin Name	I/O	Function
661	AD22	IREF[0]	–	VIDEO-Analog	669	AD23	REC656O[4]	O	VIDEO-Digital, Output buffer
662	AF24	IREF[1]	–	VIDEO-Analog	670	AH27	REC656O[3]	O	VIDEO-Digital, Output buffer
663	AG25	YOUT	O	VIDEO-Analog	671	AG26	REC656O[2]	O	VIDEO-Digital, Output buffer
664	AH25	AVSS2DA10	–		672	AG27	REC656O[1]	O	VIDEO-Digital, Output buffer
665	AE24	COUT	O	VIDEO-Analog	673	GND	GND	–	Ground
666	AH26	AVDD2DA10	–		674	AD24	REC656O[0]	O	VIDEO-Digital, Output buffer
667	GND	GND	–	Ground	675	AE25	AGCCTL	O	VIDEO-Analog
668	AF25	REC656O[5]	O	VIDEO-Digital, Output buffer					

● Others

BALL Address	Pin Name	BALL Address	Pin Name	BALL Address	Pin Name	BALL Address	Pin Name
AA23	GND	P12	GND	AC11	VDD	AB23	VDD3
AA6	GND	P13	GND	AC14	VDD	AB6	VDD3
AC12	GND	P14	GND	AC6	VDD	AC10	VDD3
AC17	GND	P15	GND	AC8	VDD	AC13	VDD3
AC20	GND	P16	GND	L6	VDD	AC16	VDD3
AC9	GND	P17	GND	AC11	VDD	AC19	VDD3
F11	GND	R12	GND	AC14	VDD	AC22	VDD3
F14	GND	R13	GND	AC6	VDD	AC7	VDD3
F17	GND	R14	GND	AC8	VDD	F10	VDD3
F20	GND	R15	GND	L6	VDD	F13	VDD3
F23	GND	R16	GND	P6	VDD	F16	VDD3
F8	GND	R17	GND	U6	VDD	F19	VDD3
H6	GND	R23	GND	Y6	VDD	F22	VDD3
J23	GND	R6	GND	F12	VDD	F7	VDD3
M12	GND	T12	GND	F6	VDD	G23	VDD3
M13	GND	T13	GND	F9	VDD	G6	VDD3
M14	GND	T14	GND	J6	VDD	K23	VDD3
M15	GND	T15	GND	AC15	VDD	K6	VDD3
M16	GND	T16	GND	AC18	VDD	N23	VDD3
M17	GND	T17	GND	AC21	VDD	N6	VDD3
M23	GND	U12	GND	AC23	VDD	T23	VDD3
M6	GND	U13	GND	F15	VDD	T6	VDD3
N12	GND	U14	GND	F18	VDD	W23	VDD3
N13	GND	U15	GND	F21	VDD	W6	VDD3
N14	GND	U16	GND	H23	VDD		
N15	GND	U17	GND	L23	VDD		
N16	GND	V23	GND	P23	VDD		
N17	GND	V6	GND	U23	VDD		
				Y23	VDD		

UPD72852AGB-8EU (MAIN ASSY : IC5101)

• IEEE1394 Physical IC

● Pin Arrangement

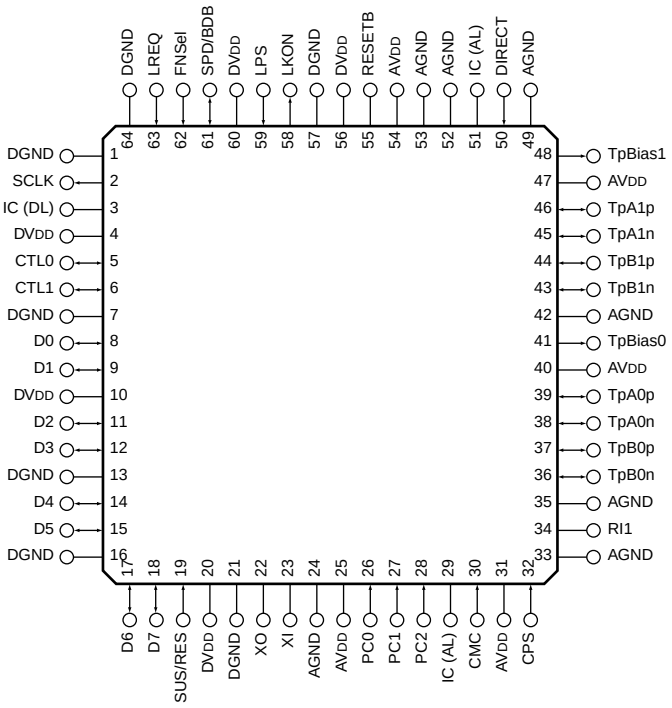

● Block Diagram

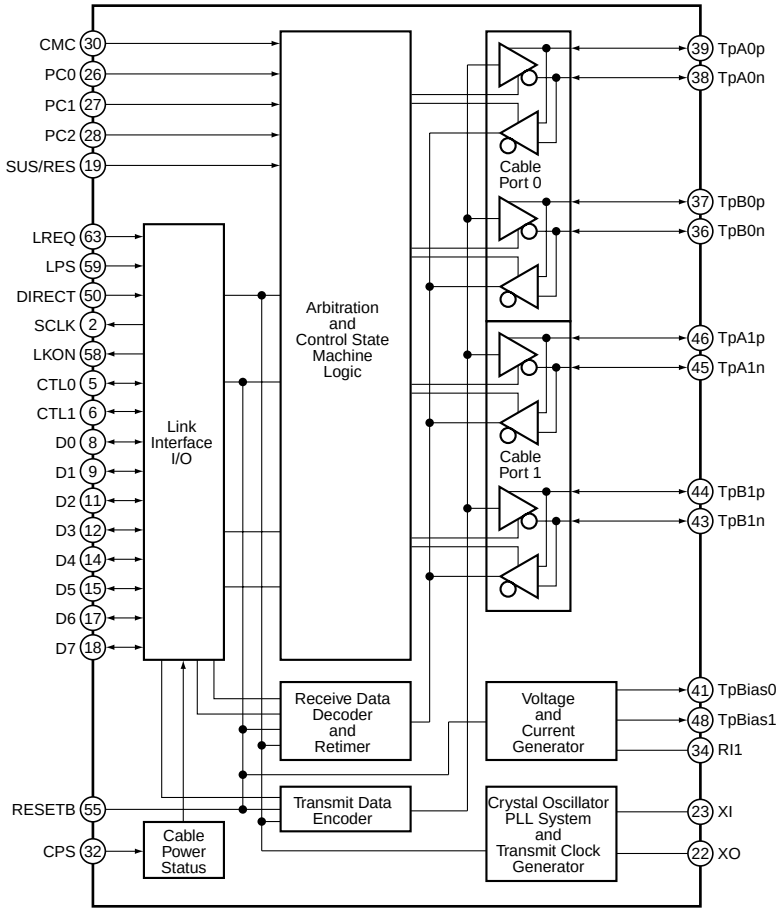

● Pin Function

• Cable Interface Pins

No.	Pin Name	I/O	Function
39	TpA0p	I/O	Port 0 twisted pair cable A positive phase I/O
38	TpA0n	I/O	Port 0 twisted pair cable A negative phase I/O
37	TpB0p	I/O	Port 0 twisted pair cable B positive phase I/O
36	TpB0n	I/O	Port 0 twisted pair cable B negative phase I/O
46	TpA1p	I/O	Port 1 twisted pair cable A positive phase I/O
45	TpA1n	I/O	Port 1 twisted pair cable A negative phase I/O
44	TpB1p	I/O	Port 1 twisted pair cable B positive phase I/O
43	TpB1n	I/O	Port 1 twisted pair cable B negative phase I/O
19	SUS/RES	I	Suspend/Resume function select 1 : Suspend/Resume on (IEEE1394a-2000 compliant) 0 : Suspend/Resume off (P1394a draft 1.3 compliant)
32	CPS	I	Cable power status Connect to the cable through a 390 kΩ resistor and to the GND through a 100 kΩ resistor. 0 : Cable power fail 1 : Cable power on

• Link Interface Pins

No.	Pin Name	I/O	Function
8	D0	I/O	Data input/output (bit 0)
9	D1	I/O	Data input/output (bit 1)
11	D2	I/O	Data input/output (bit 2)
12	D3	I/O	Data input/output (bit 3)
14	D4	I/O	Data input/output (bit 4)
15	D5	I/O	Data input/output (bit 5)
17	D6	I/O	Data input/output (bit 6)
18	D7	I/O	Data input/output (bit 7)
5	CTL0	I/O	Link interface control (bit 0)
6	CTL1	I/O	Link interface control (bit 1)
63	LREQ	I	Link request input
2	SCLK	O	Link control output clock LPS 1 : 49.152 MHz output LPS 0 : Clamp to 0 (The clock signal will be output within 25 μsec after change to "0")
59	LPS	I	Link power status input 0 : Link power off 1 : Link power on (PHY/Link direct connection)
58	LKON	O	Link-on signal output Link-on signal is 6.1444 MHz clock output.
50	DIRECT	I	PHY/Link isolation barrier control input 0 : Isolation barrier 1 : PHY/Link direct connection

• Control Pins

No.	Pin Name	I/O	Function
26	PC0	I	Power class set input This pin status will be loaded to Pwr_class bit which allocated to PHY register 4H. IEEE1394a-2000 chapter [4.3.4.1]
27	PC1	I	
28	PC2	I	
30	CMC	I	Configuration manager capable setting This pin status will be loaded to Contender bit which allocated to PHY register 4H. 0 : Non contender 1 : Contender
55	RESETB	I	Power on reset input Connect to GND through a 0.1 μF capacitor. 0 : Reset 1 : Normal
61	SPD/BDB	I FNSel = 0	Speed select (UPD72852GB) 0 : MAX. S200 1 : MAX. S400
		O FNSel = 1	BIAS Detected output (Logical Inverse) 0 : BIAS is coming from some port. 1 : BIAS is not coming from any port.

• IC

No.	Pin Name	I/O	Function
29, 51	IC (AL)	–	Internally Connected (Low Clamped) Connected to GND.
3	IC (DL)	–	Internally Connected (Low Clamped) Connected to GND.

• Power Supply Pins

No.	Pin Name	I/O	Function
25, 31, 40, 47, 54	AV_{DD}	–	Analog power
24, 33, 35, 42, 49, 52, 53	AGND	–	Analog GND
4, 10, 20, 56, 60	DV_{DD}	–	Digital V_{DD}
1, 7, 13, 16, 21, 57, 64	DGND	–	Digital GND

• Other Pins

No.	Pin Name	I/O	Function
41	TpBias0	O	Port 0 twisted pair output
48	TpBias1	O	Port 1 twisted pair output
34	RI1	–	Resistor connection pin 1 for reference current generator Please connect to GND pin through the 9.1 kΩ resistor.
23	XI	–	Crystal oscillator connection XI
22	XO	–	Crystal oscillator connection XO
62	FNSel	I	Function Select 0 : #61 acts as SPD (UPD72852GB compliant) 1 : #61 acts as BDB

UPD72893AGD-LML (MAIN ASSY : IC5202)

• IEEE1394 Link IC

● Pin Arrangement

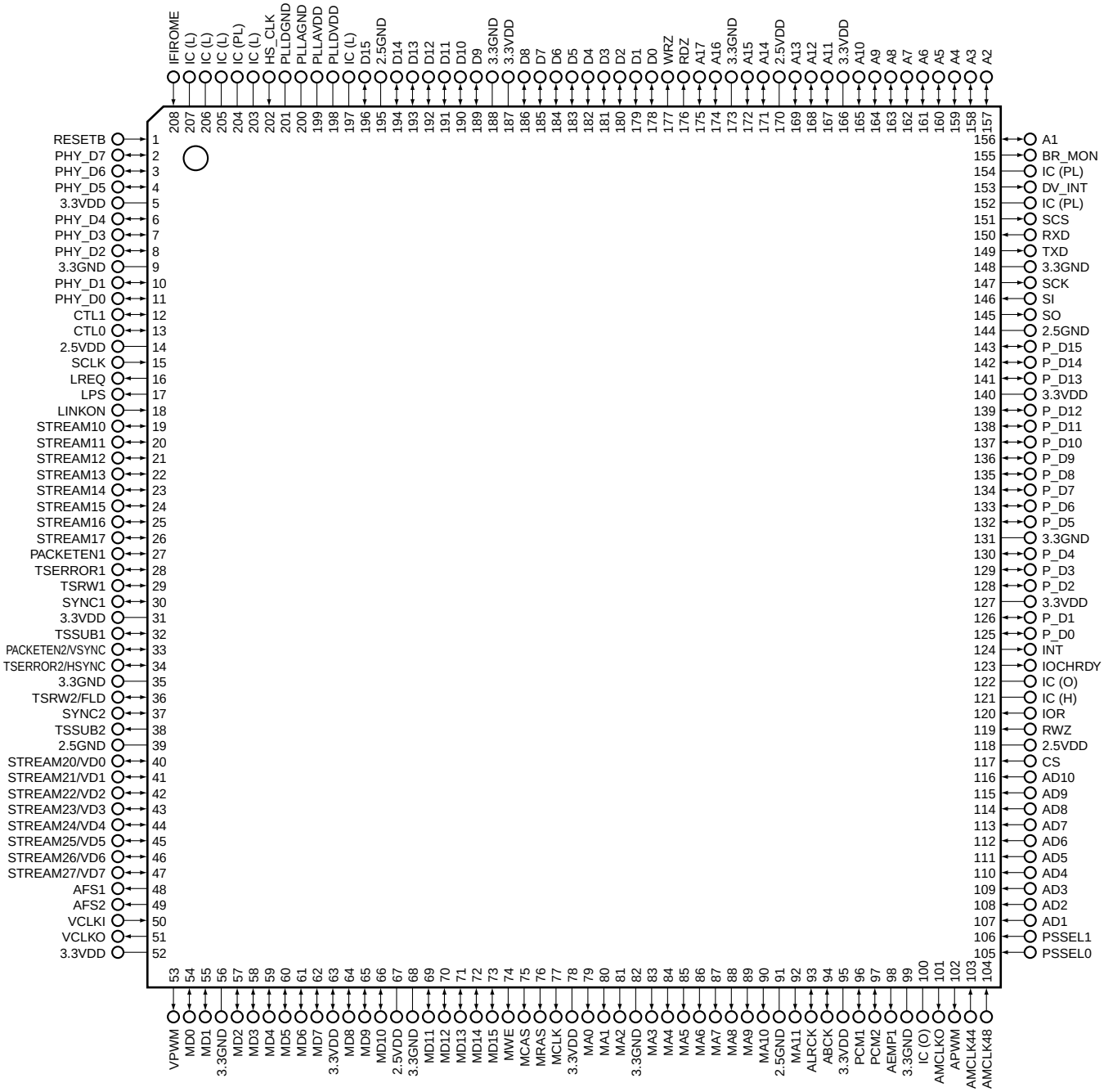

● Block Diagram

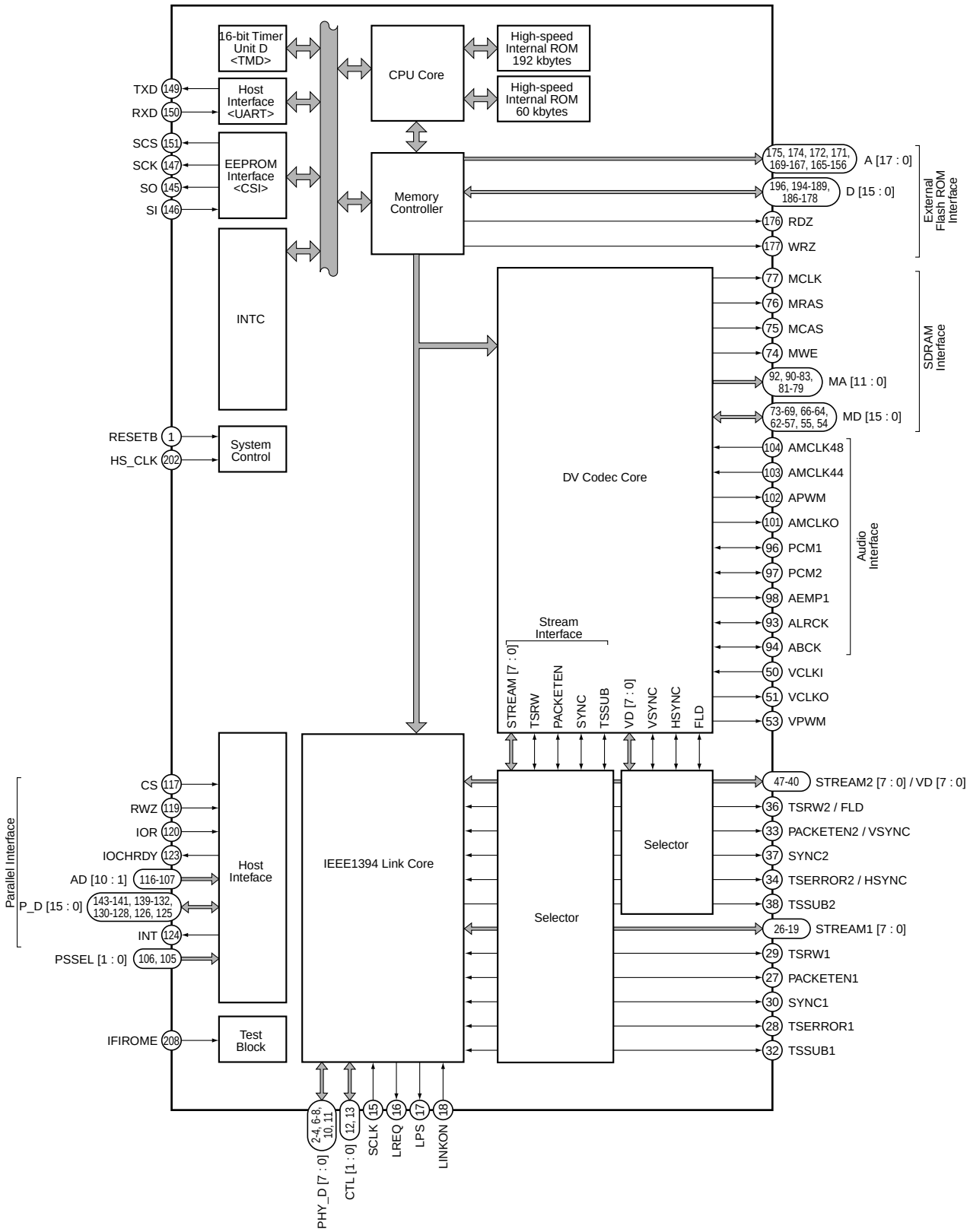

● Pin Function

(1) Link relation

No.	Pin Name	I/O	Function	Active
18	LINKON	I	Link-on signal input Clock input When LPS is active, input 0.	–
17	LPS	O	Link power status output Link power OFF : 0 Link power ON : 2.7 MHz pulse output (20 dividing of host clock 54 MHz)	–
16	LREQ	O	Link request output	–
15	SCLK	I	Clock input for Link control LPS is active : 49.152 MHz input LPS = 0 0 : fixed	–
12, 13	CTL [1 : 0]	I/O	PHY/Link control signal input/output	–
2-4, 6-8, 10,11	PHY_D [7 : 0]	I/O	Data input/output between PHY-Link	–
26-19	STREAM1 [7 : 0]	I/O	ISO data bus of stream interface 1	–
27	PACKETEN1	I/O	Packet enable signal input/output of stream interface 1	H/L
28	TSERROR1	I/O	Packet error signal input/output of stream interface 1	H/L
29	TSRW1	I/O	Data read/write enable signal input/output of stream interface 1	–
30	SYNC1	I/O	Frame synchronous signal input/output of stream interface 1	H/L
32	TSSUB1	I/O	Not used Connect to VDD or GND through a resistor.	H/L
47-40	STREAM2 [7 : 0]	I/O	ISO data bus of stream interface 2	–
33	PACKETEN2	I/O	Packet enable signal input/output of stream interface 2	H/L
34	TSERROR2	I/O	Packet error signal input/output of stream interface 2	H/L
36	TSRW2	I/O	Data read/write enable signal input/output of stream interface 2	–
37	SYNC2	I/O	Frame synchronous signal input/output of stream interface 2	H/L
38	TSSUB2	O	Not used Set to open.	–

(2) Video interface pins

No.	Pin Name	I/O	Function	Active
50	VCLKI	I	Video clock input (27 MHz)	–
51	VCLKO	O	Video clock output (27 MHz)	–
47-40	VD [7 : 0]	I/O	Video data signal	–
33	VSYNC	I/O	Video vertical sync. signal	L
34	HSYNC	I/O	Video horizontal sync. signal	L
36	FLD	I/O	Field index signal	–
53	VPWM	O	PWM signal for video PLL	–

(3) Audio interface pins

No.	Pin Name	I/O	Function	Active
104	AMCLK48	I	Audio master clock input for sampling frequency 48 kHz	–
103	AMCLK44	I	Audio master clock input for sampling frequency 44 kHz	–
101	AMCLKO	O	Audio master clock output	–
96	PCM1	I/O	Audio PCM serial data At 2ch : System 1 (data of audio block 1) At 4ch : System 1 The above is default setting value. Input/output data of PCM 1 and PCM 2 is replaced by Channel swap setting of an AUDIO_FUNC register.	–
97	PCM2	I/O	Audio PCM serial data At 2ch : Mute At 4ch : System 2 (data of audio block 2) The above is default setting value. Input/output data of PCM 1 and PCM 2 is replaced by Channel swap setting of an AUDIO_FUNC register. Note: Cannot use it in DV decode.	–
98	AEMP1	O	PCM1 emphasis ON/OFF in PCM 1 output	H
93	ALRCK	I/O	Audio LR clock L ch : High R ch : Low	–
94	ABCK	I/O	Audio bit clock	–
49, 48	AFS [2 : 1]	O	Audio sampling frequency AFS2 AFS1 44.1 kHz 0 1 48 kHz 0 0 32 kHz 1 0	–
102	APWM	O	PWM signal for audio PLL	–

(4) SDRAM interface pins

No.	Pin Name	I/O	Function	Active
77	MCLK	O	CLK pin connection of SDRAM	–
76	MRAS	O	RAS pin connection of SDRAM	–
75	MCAS	O	CAS pin connection of SDRAM	–
74	MWE	O	WE pin connection of SDRAM	–
92, 90-83, 81-79	MA [11 : 0]	O	Address pin connection of SDRAM	–
73-69, 66-64, 62-57, 55, 54	MD [15 : 0]	I/O	Data pin connection of SDRAM Note: Process of pull-up or pull down is necessary. So connect it to SDRAM directly.	–

(5) Host interface pins

(a) Parallel interface pins

No.	Pin Name	I/O	Function	Active
117	CS	I	Chip select input of parallel interface	L
119	RWZ	I	Read and write control input of parallel interface ISA type bus, SH-1 bus: Write strobe 68000 bus : Read/write selection signal	L
120	IOR	I	IO read control input of parallel interface ISA type bus, SH-1 bus : Read strobe 68000 bus : Data strobe (DS)	L
123	IOCHRDY	O	Ready output of parallel interface	L
116-107	AD [10 : 1]	I	Address input of parallel interface	–
143-141, 139-132, 130-128, 126, 125	P_D [15 : 0]	I/O	Data input/output of parallel interface	–

(b) Serial interface pins

No.	Pin Name	I/O	Function	Active
149	TXD	I/O	Serial transmission data output of unsynchronous serial interface (UART)	–
150	RXD	I/O	Serial transmission data input of unsynchronous serial interface (UART)	–

(c) Others

No.	Pin Name	I/O	Function	Active
124	INT	O	Interrupt output to the outside	H
106, 105	PSSEL [1 : 0]	I	Parallel/serial interface selection Input signal to select the outside interface which of parallel interface or serial interface. PSSEL [1 : 0] Select 00 Serial interface (UART) 01 Parallel interface (ISA type bus) 10 Parallel interface (68000 bus) 11 Parallel interface (SH-1 bus)	–

(6) External ROM connection pins

(a) Flash ROM interface pins

No.	Pin Name	I/O	Function	Active
196, 194-189, 186-178	D [15 : 0]	I/O	External ROM data bus Data bus in the external ROM access. Process of pull-up or pull down is necessary.	–
175, 174, 172, 171, 169-167, 165-156	A [17 : 1]	O	External ROM address bus Address bus in the external ROM access. Can addressing the 256k byte space.	–
176	RDZ	O	ROM read Strobe signal which shows a read cycle for external ROM. It becomes the inactive in the idle state.	L
177	WRZ	O	ROM write Strobe signal which shows a write cycle for external ROM.	L

(b) EEPROM interface pins

No.	Pin Name	I/O	Function	Active
145	SO	I/O	Serial transmit data output of clock-synchronous system serial interface (CSI)	–
146	SI	I/O	Serial receive data input of clock-synchronous system serial interface (CSI)	–
147	SCK	I/O	Clock output of clock-synchronous system serial interface (CSI)	–
151	SCS	I/O	Chip select output of clock-synchronous system serial interface (CSI)	–

(7) Clock and reset pins

No.	Pin Name	I/O	Function	Active
1	RESETB	I	Reset RESETB input is asynchronous input. When a signal of fixed low-level width is input without relation to an operation clock, take precedence of all operation, and reset the system. Note: RESETB is low-active.	L
202	HS_CLK	I	Host clock Clock input pin which is supplied to CPU core and built-in peripheral I/O. Please input 27 MHz clock. Perform 2 multiply with internal PLL by 27 MHz clock, 54 MHz clock is supplied to CPU core and internal peripheral I/O.	–

(8) Power supply and ground pins

No.	Pin Name	I/O	Function	Active
5, 31, 52, 63, 78, 95, 127, 140, 166, 187	3.3VDD	–	3.3V power supply 3.3V positive power supply pins. Power supply for 3.3V interface I/O.	–
14, 67, 118, 170	2.5VDD	–	2.5V power supply 2.5V positive power supply pins. Power supply for internal each block.	–
39, 91, 144, 195	2.5GND	–	Ground pins Connect all GND pins to the common ground.	–
9, 35, 56, 68, 82, 99, 131, 148, 173, 188	3.3GND			–
199	PLLAVDD	–	Analog power supply for multiply circuit Analog positive power supply pin for PLL. Supply 2.5V.	–
200	PLLAGND	–	Analog ground for multiply circuit Analog ground for PLL	–
198	PLLDVDD	–	Digital power supply for multiply circuit Digital positive power supply pin for PLL. Supply 2.5V.	–
201	PLLDGND	–	Digital ground for multiply circuit Digital ground for PLL	–
121	IC (H)	–	Internally connected pin Connect to VDD directly.	–
197, 203, 205-207	IC (L)	–	Internally connected pin Connect to ground directly.	–
152, 154, 204	IC (PL)	–	Internally connected pin Connect to ground through a resistor.	–
100, 122	IC (O)	–	Internally connected pin Set to open.	–

(9) Others

No.	Pin Name	I/O	Function	Active
153	DV_INT	I/O	Interrupt pin to the outside for the DV status read out.	H
155	BR_MON	I/O	Shows the bus reset occurred. There is some delay after real bus reset occurred because of set by the built-in firmware.	H
208	IFIROME	I	ROM operation selection input Set to 1 normally.	–

7.3 OUTLINE OF THE PRODUCT

Main newly developed technologies

1. Pickup

The pickup supports quadruple-speed recording for the DVD-R/RW.
A liquid-crystal tilt servo system is adopted for the pickup.

2. Recording-signal-processing LSI

• UPD3320GC (DRIVE Assy: IC101)
The recording-signal-processing module of conventional models consists of two chips, but this has been integrated into a single newly developed recording-signal-processing LSI, enabling stable performance and cost reduction.

3. AV-signal-processing LSI

• M65672WG-B (MAIN Assy: IC1001)
The AV-signal-processing module of conventional models consists
of eleven chips, but this has been integrated into a single newly developed AV-signal-processing LSI, enabling large-scale cost reduction while maintaining the conventional functions. In the new LSI, all the basic functions necessary for a DVD recorder have been integrated. Like conventional models, this model is designed to support multitasking. The main functions are as follows:

- 3-D Y/C separation
- Video decoding
- Frame TBC
- MPEG video encoding
- Dolby Digital Consumer Encoding
- ATA/ATAPI I/F (2 ch)
- Main CPU (32-bit RISC, 54 MHz)
- Graphics engine (OSD, scaling, mixing)
- MPEG video decoding
- Audio decoding (AC-3, MPEG)
- Video encoding
- Progressive conversion
- Audio I/F
- 3-D DNR for playback

4. DV-signal-processing LSI

The DV-signal-processing LSI consists of the following two chips:
• UPD72862AGB-SEU (MAIN Assy: IC5101)
A 400-Mbps two-port PHY LSI in compliance with the IEEE1394a-
2000 standards

• UPD72893AGD-LML (MAIN Assy: IC5202)
An EEE1394 link controller LSI having DV (digital video) encoding/decoding functions. Encoding/decoding of digital video signals in compliance with the SD specifications (NTSC/PAL) of the DV standard is supported. The 32-bit RISC CPU is built in for controlling the IEEE1394 bus and sending/receiving AV/C commands.

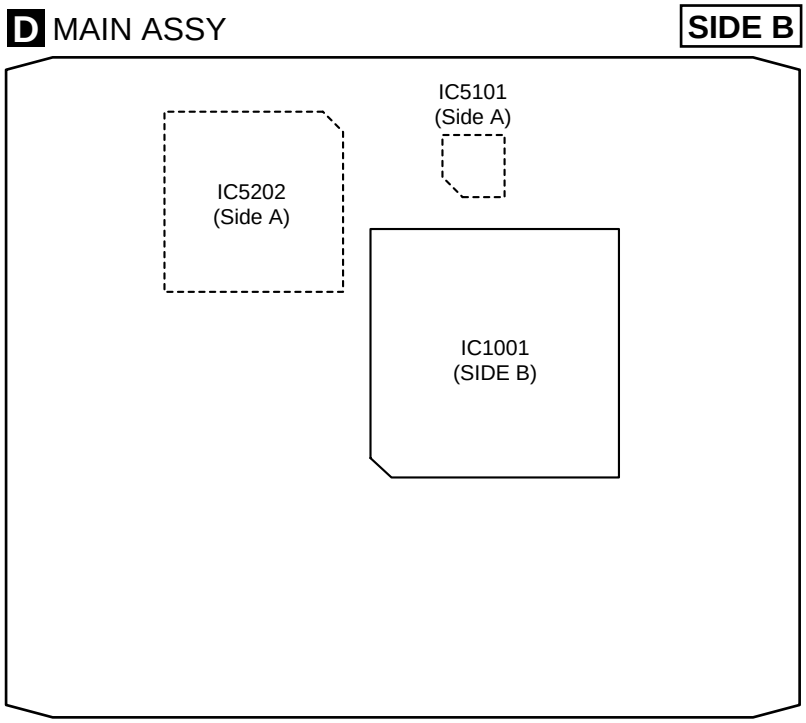

Fig.1 MAIN Assy

System configuration

In each signal-processing LSI of the main function blocks, various processes have been integrated into one chip, which enables simpler system configuration. With the AV-signal-processing LSI at the center, video inputs/outputs, audio inputs/outputs, DV inputs/outputs, writer, HDD, and various memory cells are connected to it.

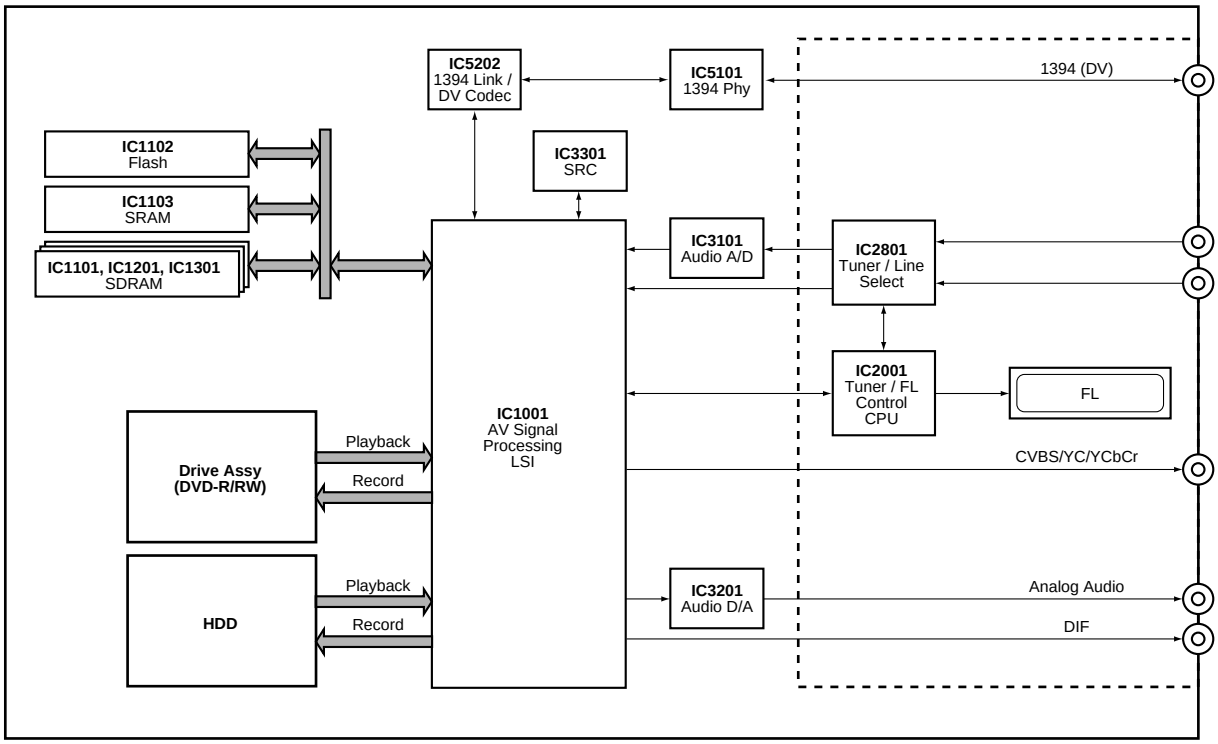

Fig2. System configuration

New functions and specifications

In this model, the following new functions and specifications have been included in addition to those of conventional models:

1. Improved multitasking functions

As both the HDD and DVD drive are mounted in this model, like conventional models, the unit is designed to support various multitasking. Furthermore, this model supports DVD multitasking (only in VR mode), which was impossible with conventional models.

ⓐ Pursuit playback
Playback of the title being recorded by the DVD drive in VR mode or the HDD is supported.

ⓑ Simultaneous recording/playback 1
Playback of a title other than that being recorded by the DVD drive in VR mode or the HDD is also supported.

ⓒ Simultaneous recording/playback 2
DVD playback during HDD recording is supported.

ⓓ Simultaneous recording/playback 3
HDD playback during DVD recording is supported.

ⓔ Recording during high-speed dubbing
HDD recording during high-speed dubbing from the HDD to a DVD is supported.

ⓕ Playback during high-speed dubbing
Playback of an HDD title during high-speed dubbing from the HDD to a DVD is supported.

2. Improved dubbing functions

High-speed dubbing and normal-speed dubbing are supported, as with conventional models. A one-touch dubbing function that enables automatic selection between these dubbing functions is also provided. In this model, high-speed dubbing from a DVD (in VR mode) to the HDD is also an added capability.

3. Disc backup

The function of creating a backup disc for a disc recorded in Video mode is added. The data of the original DVD are transferred to the HDD, then retransferred to the DVD drive, and because no reencoding is required during data transmission between the drives, a backup disc with no degradation of video and audio signals can be created.

4. Advanced disc NAVI

In the conventional disc NAVI function, recorded titles are displayed with still pictures as a list. In the advanced disc NAVI function, the title selected with the cursor is displayed as an animated picture with sound.

5. Improved Still Picture menu in Video mode

The disc NAVI function, which enables displaying a list of recorded titles with still pictures, is enabled in Video mode with this model. Selection from among nine title menus is also supported.

6. Adoption of MPEG2 SIF

In MN1-6 modes, MPEG2 SIF has been adopted, instead of the MPEG1 SIF of conventional models. This enables higher-quality recording for longer hours.

7. Improved editing functions

For DVD, the original/play-list editing in DVD-VR mode available with conventional models is provided.
For HDD editing, play-list-editing functions almost the same as for the DVD-VR, such as title combination, separation, and partial erasure, are enabled for the HDD with this model. With conventional models, these edit functions are available only for the dubbing list. The automatic-chapter-mark-insertion function in response to a change in audio type (stereo, monaural, bilingual) makes commercial-cutting editing easier.

8. Various-format playback

Playback of WMA, MP3, and JPEG formats is supported.

9. Other functions and specifications

The following main functions and specifications adopted with conventional models are also provided with this model:

- 192-kHz, 24-bit DAC
- 48-kHz, 20-bit ADC
- Digital 3-D Y/C separation circuit
- Digital frame TBC
- 3-D DNR
- DV (iLink) input/output (DVR-610H)
- Built-in BS tuner (DVR-510H/515H/610H)
- Playback with commercials skipped
- CD/video-CD playback
- Picture creation
- Recording with 3/4-D1 and 2/3-D1 resolutions
- Recording mode with 32-step MNs
- LPCM recording
- High-resolution GUI
- Progressive output
- SRS TruSurround

7.4 CAUTIONS ON HANDLING THE HDD

(1) Cautions on Handling the HDD

- The HDD is very sensitive to shocks and vibrations. Care must be taken especially during operation (when the power is on).
- The HDD is very sensitive to electrostatic charges.
- Rapid change in temperature or humidity may cause deterioration of the HDD.

Note: After receiving damage caused by any above-mentioned factors, the HDD may operate normally for dozens or some hundreds of hours but then suddenly crash. If you are certain you have damaged a new repair part (HDD) while making repairs, do not use the part.

The HDD is about 10 times as sensitive to shock during operation than during nonoperation.

Reference: Main specifications on damage to the HDD

	During operation	During nonoperation
Shock G (acceleration)	<approx. 20 G	<approx. 200 G
Temperature change	< 20°C/hour	
Moisture change	< 20%/hour	

Reference: Estimate value of falling distance vs. shock (G) when the HDD is dropped without protection

Falling distance \ Landing surface	Granite surface	Concrete floor	Synthetic-resin-coated table	Antistatic sponge
0.5 inch / 12.7 mm	387	217	200	26
1.0 inch / 25.4 mm	595	457	310	37
2.0 inch / 50.8 mm	1133	600	680	70
4.0 inch / 101.6 mm	1795	1040	1050	267

(2) Cautions on handling the product on which the HDD is mounted or the HDD as a repair part, and examples of dangerous handling

[Cautions on handling the product on which the HDD is mounted]

- While the unit is turned on, the HDD is always in operation. Be sure NOT to impart shock to the unit.

● Examples of dangerous handling: while the power is on

- Bumping on the bonnet
- Dropping an object, such as a small screwdriver or remote control unit, onto the bonnet, or bumping an object against the cabinet
- Moving the unit by dragging
- Stacking another product on the unit

Note: Be sure NOT to impart shock, such as bumping or hitting a screwdriver against the HDD, during diagnosis with the bonnet open.

● Examples of dangerous handling: while the power is off

- Imparting strong shock, although the HDD is more resistant to shock when the power is off
- Dropping the unit from a height of several centimeters, or after lifting one side of the unit up, then letting the unit drop.

- Do NOT move the unit immediately after the power is turned off. Wait at least 30 seconds after the indication on the FL display changed from POWER OFF to the clock indication before moving the unit.
  If the AC power cord is accidentally disconnected before turning the unit off, wait at least for one minute before moving it. In this case, damage to the HDD caused by sudden shutoff may be small, because the emergency relief mechanism is activated. However, if sudden shutoff occurs during recording or playback, recorded data may be damaged. Be sure to check operations.

[Cautions on handling the HDD as a repair part]

1. Handle the HDD in a safe environment:
   - Handle the HDD over an antistatic pad that can also absorb shock.
   - Wear wrist bands to prevent electrostatic charges generated in your body from affecting the HDD.

2. The following must be observed when handling the HDD:
   - Handle one HDD at a time. Do NOT hold several HDDs at the same time.
   - Grip the HDD on both sides so that you do not touch its terminals or circuit boards.
   - Do NOT stack one HDD onto another HDD (even if the HDDs are protected in antistatic bags).
   - Do NOT bump the HDDs against one another.
   - Do NOT bump any tool, such as a screwdriver, or other hard object against the HDD.
   - When a repair part (HDD) is transported and there is a large temperature difference between outdoors and indoors, to the indoor, leave it in its package for about a half day to gradually cool or warm the HDD to room temperature before unpacking it.

[Notes on packing for shipment]

- When returning a defective HDD for analysis, handle with care as if it were a good product. Otherwise, the results of analysis may not be correct.
- When packing, use the antistatic bag and packing materials in which the repair part for service was delivered. Attach a copy of the slip for service or a memo stating symptoms in as much detail as possible.

■ Outline and part No. of the HDDs

*Pioneer's part No. is not stamped.

Model Name	Capacity	Maxtor		Western Digital		Seagate	
		Pioneer's Part No. (for service)	Manufacture's Part No.	Pioneer's Part No. (for service)	Manufacture's Part No.	Pioneer's Part No. (for service)	Manufacture's Part No.
DVR-510H-S	80GB	VXF1010	4R080L0-	VXF1030	WD800LB-	VXF1036	ST38001□ACE-

- When replacing the HDD, carefully check the capacity and manufacturer's part No. on the part label to avoid replacing with a similar but inappropriate product. You can also check the model No. of the mounted HDD on the Service mode screen.
- Do NOT use repair parts, such as commercially available HDDs, other than those designated above, as their functions, performance or reliability cannot be guaranteed.

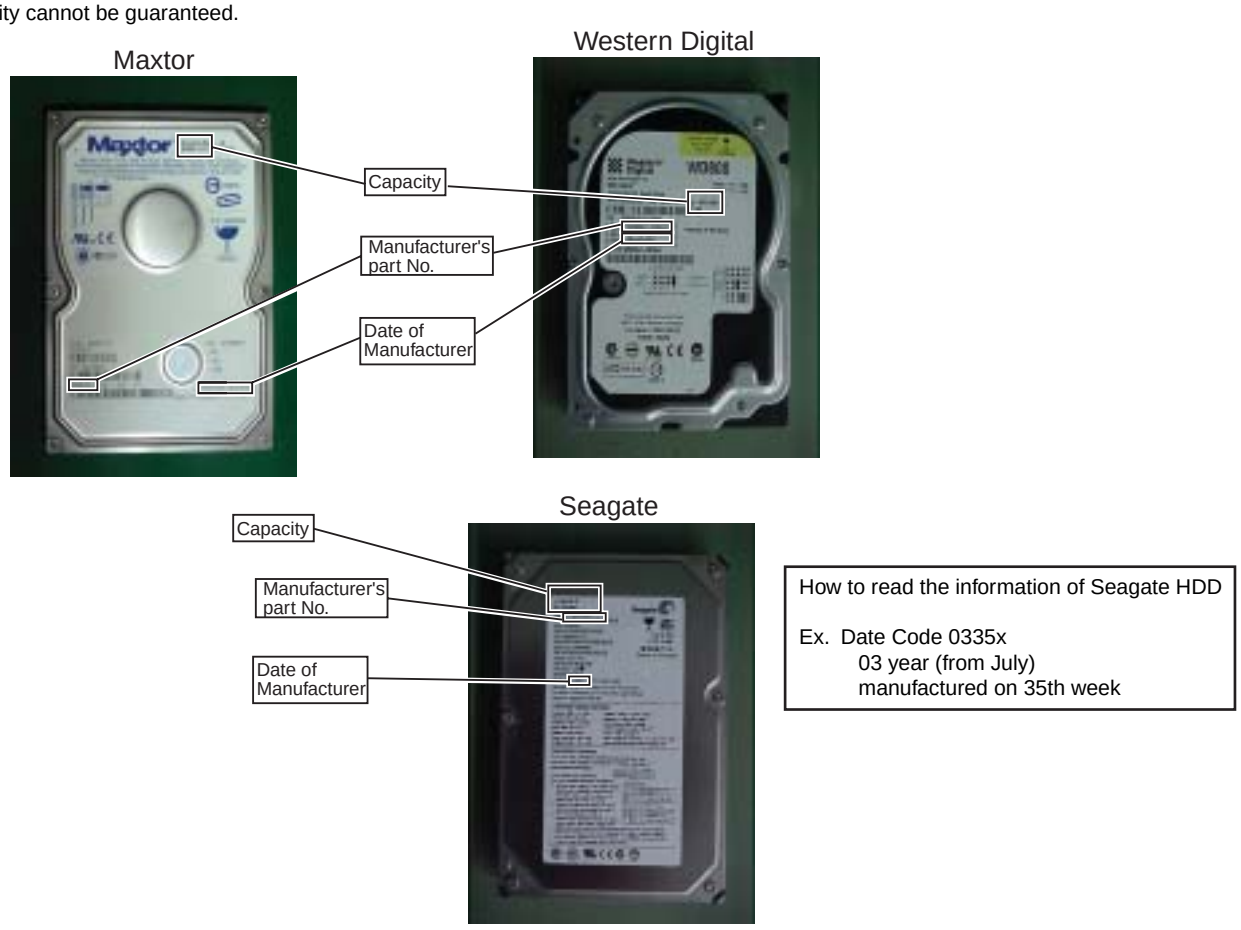

Fig.1 Location of the data on capacity and part No. of the HDD

■ Confirmation of the jumper pin location of the HDD

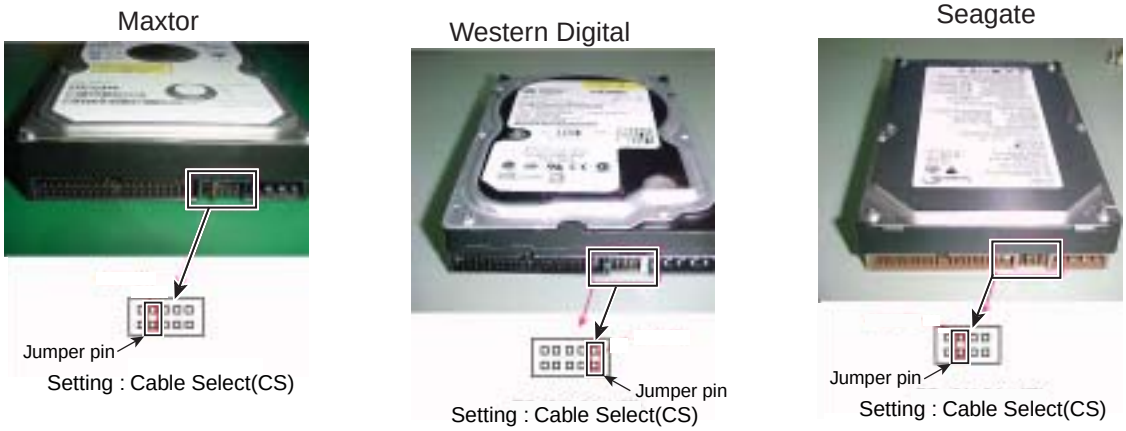

7.5 DISC/CONTENT FORMAT

Disc / content format playback compatibility

General disc compatibility

This recorder was designed and engineered to be compatible with software bearing one or more of the following logos:

DVD-Video DVD-R DVD-RW

Audio CD Video CD CD-R CD-RW

Fujicolor CD

Also compatible with KODAK Picture CD

is a trademark of Fuji Photo Film Co. Ltd.

Other formats, including but not limited to the following, are not playable in this recorder:

DVD-Audio / SACD / DVD-RAM

DVD-ROM / CD-ROM*

** Except those that contain WMA, MP3 or JPEG. See also Compressed audio compatibility and JPEG file compatibility below.*

DVD-R/RW and CD-R/RW discs recorded using a DVD recorder, CD recorder or personal computer may not be playable in this recorder. This may be caused by a number of possibilities, including but not limited to: the type of disc used; the type of recording; damage, dirt or condensation on either the disc or the pick-up lens. See below for notes about particular software and formats.

DVD-R/RW compatibility

This recorder will play and record DVD-R/RW discs that use DVD-Video format (Video mode), and DVD-RW discs that use the Video Recording (VR) format. It is compatible with DVD-RW Ver. 1.1 and Ver. 1.1 / 2x, and DVD-R Ver. 2.0 and Ver. 2.0 / 4x.

CD-R/RW compatibility

This recorder will play CD-R and CD-RW discs recorded in CD Audio or Video CD format, or as a CD-ROM containing MP3, WMA or JPEG files. However, any other content may cause the disc not to play, or create noise/ distortion in the output.

This recorder cannot record CD-R or CD-RW discs.

PC-created disc compatibility

If you record a disc using a personal computer, even if it is recorded in a "compatible format" as listed above, there will be cases in which the disc may not be playable in this recorder due to the setting of the application software used to create the disc. In these particular instances, check with the software publisher for more detailed information.

Check the DVD-R/RW or CD-R/RW software disc boxes for additional compatibility information.

WMA (Windows Media Audio) compatibility

The Windows Media logo printed on the box indicates that this recorder can playback WMA data.

WMA is short for Windows Media Audio and refers to an audio compression technology developed by Microsoft Corporation. WMA data can be encoded by using Windows Media Player version 9 (or less) or Windows Media Player for Windows XP.

Windows Media, and the Windows logo are trademarks, or registered trademarks of Microsoft Corporation in the United States and/or other countries.

Compressed audio compatibility

This recorder will play CD-ROM, CD-R, and CD-RW discs containing files saved in the MPEG-1 Audio Layer 3 (MP3) or Windows Media Audio (WMA) format with a sampling rate of 44.1 or 48kHz. Incompatible files will not play and the message **Cannot play this file format** will be displayed (**CAN'T PLAY** in the front panel display).

Fixed bit-rate MP3 files are recommended. Variable bit-rate (VBR) MP3 files are playable, but playing time may not be shown correctly.

This recorder is compatible with 44.1 and 48 kHz WMA files encoded with Windows Media Codec 8. Files encoded using Windows Media Codec 9 may be playable, but some parts of the specification are not supported (specifically, Pro, Lossless, Voice and VBR WMA files).

WMA files encoded with DRM (Digital Rights Management) copy protection will not play and the message **Cannot play this file format** will be displayed (**CAN'T PLAY** in the front panel display).

The CD-ROM used to compile your WMA/MP3 files must be ISO 9660 Level 1 or 2 compliant. CD physical format: Mode1, Mode2 XA Form1. Romeo and Joliet file systems are both compatible with this recorder.

Use CD-R or CD-RW media for recording your files. The disc must be finalized (i.e. the session must be closed) in order to play in this recorder.

This recorder only plays tracks that are named with the file extension .MP3 or .WMA (upper or lower-case).

When naming MP3 and WMA files, add the corresponding file name extension (.mp3 or .wma). Files are played according to the file extension. To prevent noise and malfunctions, do not use these extensions for other kinds of files.

This recorder can recognize up to 99 folders and 999 files (WMA/MP3). If a disc exceeds these limits, only files and folders up to these limits will be playable. Files and folders are read/displayed in alphabetical order. Note that if the file structure is very complex, you may not be able to read/play all files on the disc.

Folder, track and file names (excluding the file extension) are displayed.

There are many different recording bit-rates available to encode MP3 files. This recorder has been designed to be compatible with all of them. Audio encoded at 128Kbps should sound close to regular CD Audio quality. This recorder will play lower bit-rate files, but please note that the sound quality becomes noticeably worse at lower bit-rates.

JPEG file compatibility

This recorder is compatible with Fujicolor CD and Kodak Picture CD formats, as well as CD-R/RW/ROM discs containing JPEG files.

Baseline JPEG and EXIF 2.2[*1] still image files are supported (horizontal resolution from 160–5120 pixels; vertical resolution between 120–3840 pixels).

[*1] *File format used by digital still cameras*

The CD-ROM used to compile your JPEG files must be ISO 9660 Level 1 or 2 compliant. CD physical format: Mode1, Mode2 XA Form1. Romeo and Joliet file systems are both compatible with this recorder.

This recorder only displays files that are named with the file extension .jpg, .jpeg, .jif, or .jfif (upper or lower-case).

The recorder can load up to 99 folders and 999 files at one time. If there are more files/folders than this on the disc then more can be reloaded.

7.6 CLEANING

Before shipping out the product, be sure to clean the following positions by using the prescribed cleaning tools:

Position to be cleaned	Cleaning tools
Pickup lenses	Cleaning liquid : GEM1004 Cleaning paper : GED-008

Position to be cleaned	Cleaning tools
Fans	Cleaning paper : GED-008

8. PANEL FACILITIES

8.1 FRONT SECTION

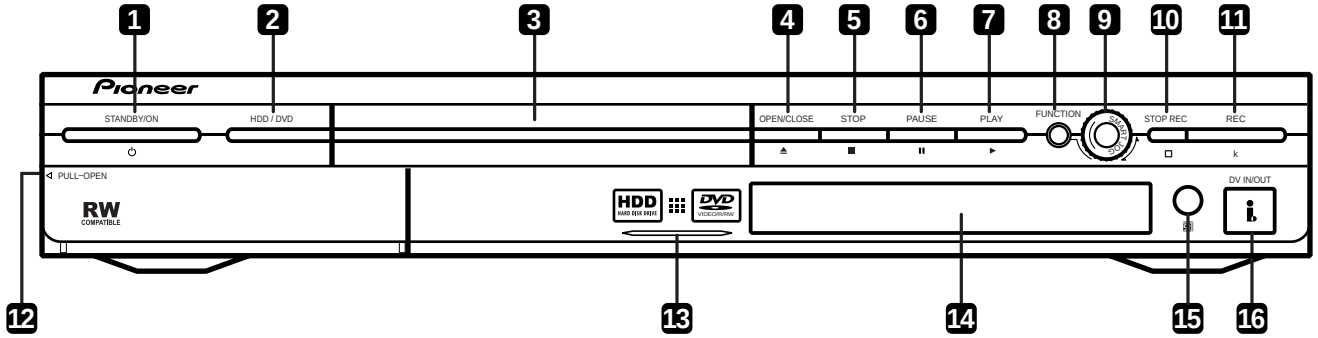

1 ⏻ STANDBY/ON
Press to switch the recorder on/into standby.

2 HDD/DVD
Press to switch between hard disc drive(HDD) and DVD for recording and playback.

3 DVD disc tray

4 ⏏ OPEN/CLOSE
Press to open/close the disc tray.

5 ■ STOP
Press to stop playback.

6 ❚❚ PAUSE
Press to pause/restart playback or recording.

7 ► PLAY
Press to start or restart playback.

8 FUNCTION
Press repeatedly to set the function of the **SMART JOG** dial. The function is shown in the display.

9 SMART JOG dial

10 □ STOP REC
Press to stop recording.

11 ● REC
Press to start recording.

12 Front panel inputs
Pull the cover down where indicated to access the front panel input jacks. Especially convenient for connecting camcorders and other portable equipment.

13 HDD indicator
Lights when the HDD is selected for playback/recording.

14 Front panel display
See Display for details.

15 IR remote sensor

16 DV IN/OUT jack
Digital input/output jack for use with a DV camcorder.

8.2 DISPLAY

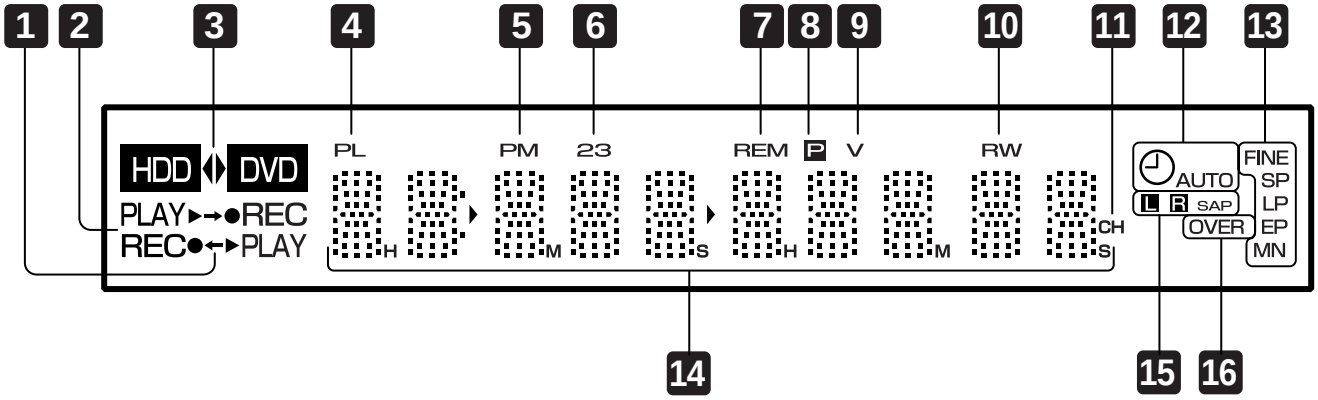

1 ← / →
Arrows indicates the copy direction between the HDD(HDD) and DVD(DVD).

2 ► PLAY / ● REC indicators
Lights during playback / recording ; blinks when playback / recording is paused.

3 HDD ◄ ► DVD
The "◄" and "►" indicators light to indicate that the HDD or DVD is selected for recording/playback.

4 PL
Lights when a VR mode disc is loaded and the recorder is in Play List mode.

5 PM
Lights to indicate PM (after midday) for the clock display.

6 2 3
Shows the remote control mode (if nothing is displayed, the remote control mode is 1).

7 REM
Lights when the character display is showing the remaining available recording time.

8 P
Lights when the component video output is set to progressive scan.

9 V
Lights when an unfinalized Video mode disc is loaded.

10 R / RW
Indicates the type of recordable DVD loaded: DVD-R or DVD-RW.

11 CH
Channel indicator for the built-in TV tuner.

12 ◴
Lights when a timer recording has been set.
(Indicator blinks if the timer has been set but there isn't a recordable disc loaded, or the timer has been set to HDD but the HDD is not recordable.)

AUTO
Lights when Auto Start Recording has been set, and during Auto Start Recording.

13 Recording quality indicators

FINE
Lights when the recording mode is set to **FINE** (best quality).

SP
Lights when the recording mode is set to **SP** (standard play).

LP
Lights when the recording mode is set to **LP** (long play).

EP
Lights when the recording mode is set to **EP** (extended play).

MN
Lights when the recording mode is set to **MN** (manual recording level) mode.

14 Character display

15 Channel recording indicators

L R
Indicates which channels are recorded when Dual Mono is selected.

SAP
Lights when the currently selected TV channel has a Second Audio Program channel.

16 OVER
Lights when the analog audio input level is too high.

8.3 REAR PART

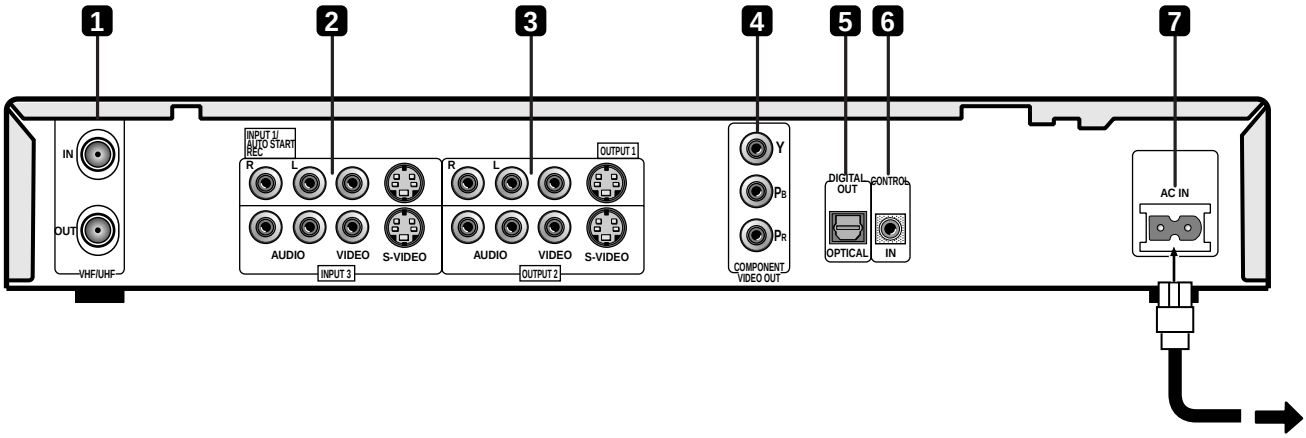

1 VHF/UHF IN/OUT

Connect your TV antenna to the **VHF/UHF** IN jack. The signal is passed through to the **VHF/UHF OUT** jack for connection to your TV.

2 Audio/video inputs 1 and 3

Two sets of audio/video inputs (stereo analog audio; composite and S-video video) that you can use to connect to satellite receivers, TVs, VCR or other source component for recording.

3 Audio/video outputs 1 and 2

Two sets of audio/video outputs (stereo analog audio; composite and S-video video) that you can use to connect TVs or monitors.

4 COMPONENT VIDEO OUT

A high-quality video output for connecting to a TV or monitor with a component video input.

5 DIGITAL OUT OPTICAL

A digital audio output for connecting to an AV receiver, Dolby Digital/DTS decoder or other equipment with optical digital input.

6 CONTROL IN

Use to control this recorder from the remote sensor of another Pioneer component with a **CONTROL OUT** terminal and bearing the Pioneer mark. Connect the **CONTROL OUT** of the other component to the **CONTROL IN** of this recorder using a mini-plug cord.

7 AC IN

Connect to a power outlet using the supplied power cable after making all other connections.

Front panel connections

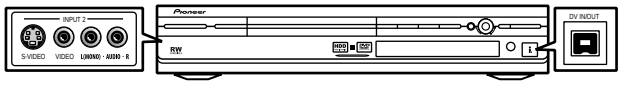

On the left side of the front panel a flip-down cover hides a third audio/video input, consisting of an S-video and standard (composite) video jack, and stereo analog audio jacks.
On the right side is the DV input/output i.LINK connector. This is for connection to a DV camcorder.

8.4 REMOTE CONTROL

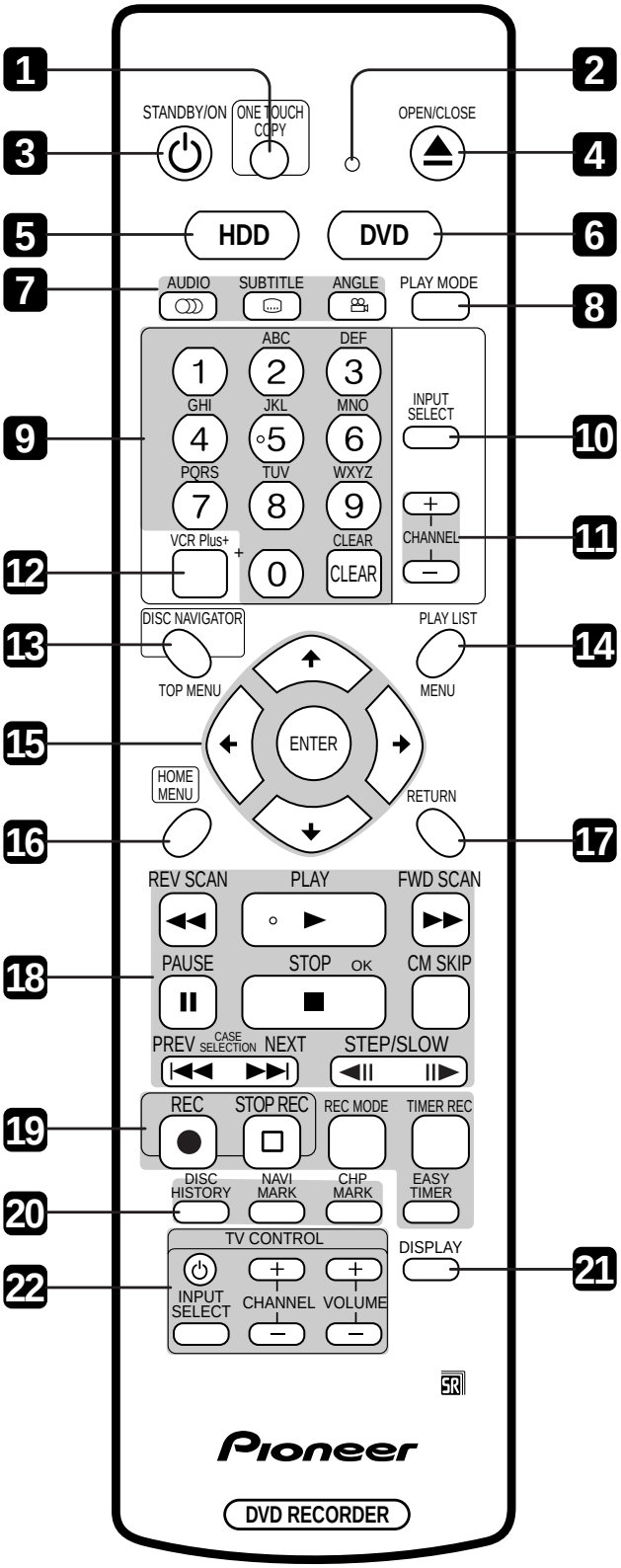

1 ONE TOUCH COPY
Press to start One Touch Copy of the currently playing title to DVD or the HDD. See also *Note on copying* on the following page.

2 Remote control indicator
Lights when setting up the remote control for use with a TV and when setting the remote control mode

3 ⏻ STANDBY/ON
Press to switch the recorder on/into standby.

4 ⏏ OPEN/CLOSE
Press to open/close the disc tray.

5 HDD
Press to select the hard disc(HDD) for recording or playback.

6 DVD
Press to select the DVD for recording or playback.

7 DVD playback functions
AUDIO
Changes the audio language or channel. (When the recorder is stopped, press to change the tuner audio.)
SUBTITLE
Displays/changes the subtitles included in multilingual DVD-Video discs.
ANGLE
Switches camera angles on discs with multi-angle scenes.

8 PLAY MODE
Press to display the Play Mode menu (for features such as search, repeat and program play).

9 Alphanumeric buttons and CLEAR
Use the number buttons for track/chapter/title selection; channel selection, and so on. The same buttons can also be used to enter names for titles, discs and so on.
Use **CLEAR** to clear an entry and start again.

10 INPUT SELECT
Press to change the input to use for recording.

11 CHANNEL +/–
Press to change the channel of the built-in TV tuner.

12 VCR Plus+
Press, then use the number buttons to enter a PlusCode programming number for timer recording.

13 DISC NAVIGATOR / TOP MENU
Press to display the Disc Navigator screen, or the top menu if a DVD-Video disc is loaded.

14 PLAY LIST / MENU
Press to switch between Original and Play List content on VR mode discs, or display the disc menu if a DVD-Video disc is loaded.

15 ⬆ / ⬇ / ⬅ / ➡ (cursor buttons) and ENTER
Used to navigate all on-screen displays. Press **ENTER** to select the currently highlighted option.

16 HOME MENU
Press to display the Home Menu, from which you can navigate all the functions of the recorder.

17 RETURN
Press to go back one level in the on-screen menu or display.

18 Playback controls

◄◄ REV SCAN / FWD SCAN ►►
Press to start reverse or forward scanning. Press again to change the speed.

► PLAY
Press to start playback.

II PAUSE
Press to pause playback or recording.

■ STOP
Press to stop playback.

CM SKIP
Press to skip 30 seconds forward on the disc (about the length of a typical TV commercial); press repeatedly to skip up to 4 minutes.

I◄◄ PREV / NEXT ►►I
Press to skip to the previous or next title / chapter / track / folder; or to display the previous or next menu page.

◄II STEP/SLOW II►
During playback, press to start slow-motion playback; while paused, press to show the previous or next video frame.

19 Recording controls

● REC
Press to start recording. Press repeatedly to set the recording time in blocks of 30 mins.

□ STOP REC
Press to stop recording.

REC MODE
Press repeatedly to change the recording mode (picture quality).

TIMER REC
Press to set a timer recording from the standard Timer Recording screen.

EASY TIMER
Press to set a timer recording from the Easy Timer screen.

20 DISC HISTORY
Press to display summary information (disc name, recording time left, etc.) from the last 30 recordable discs loaded.

NAVI MARK
Press to select a thumbnail picture for the current title for use in the Disc Navigator screen.

CHP MARK
Press to insert a chapter marker when playing/ recording a VR mode DVD-RW disc or the HDD.

21 DISPLAY
Displays/changes the on-screen information displays.

22 TV CONTROL
After setting up, use these controls to control your TV.

Note on copying:
You may use this product only to reproduce or copy materials for which you own the copyright or have obtained permission to copy from the copyright owner or for which you otherwise have a legal right to reproduce or copy. Unless you own the copyright or have obtained permission from the copyright owner or otherwise have a legal right to reproduce or copy, you may be violating the law, including copyright law, and may be subject to payment of damages and other remedies.